PRELIMINARY NOT FOR CONSTRUCTION

SHOREWOOD HILLS NORTH -- PHASE III
STREET & UTILITY CONSTRUCTION

Town of Lake Mills
Jefferson County, WI
June 2016

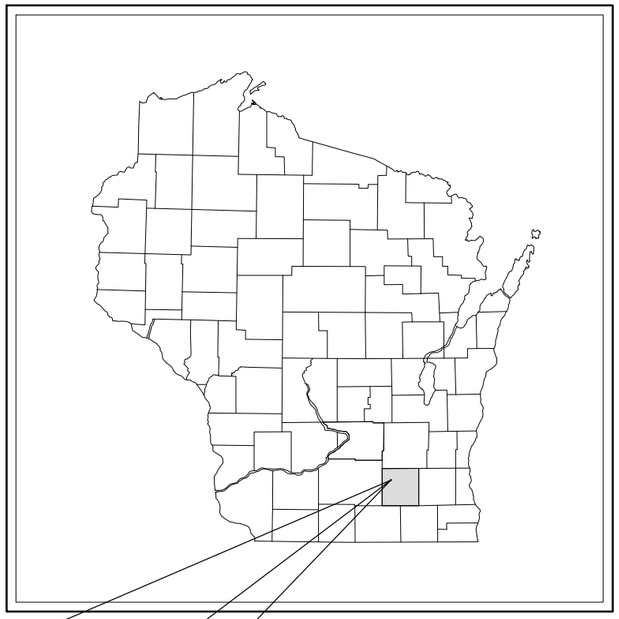

PROJECT LOCATION

N

NO SCALE

TOWN OF LAKE MILLS
LOCATION PLAN

PROJECT LOCATION

TABLE OF CONTENTS:

GENERAL

G1.0	TITLE PAGE
G1.1	LEGEND & NOTES

CIVIL

C1.0	PROPOSED SITE PLAN
C2.0-C2.2	GRADING & EROSION CONTROL PLAN
C3.0-C3.1	PLAN & PROFILE - BRIDLE PATH
C4.0	PLAN & PROFILE - SADDLE LANE
C5.0-C5.7	CROSS SECTIONS - BRIDLE PATH
C6.0-C6.1	CROSS SECTIONS - SADDLE LANE
C7.0	SANITARY SEWER CONSTRUCTION DETAILS
C7.1	STORM SEWER & STREET IMPROVEMENT DETAILS
C7.2	EROSION CONTROL DETAILS

ENGINEER SEAL:

General Engineering Company
P.O. Box 340 • 916 Silver Lake Dr. • Portage, WI 53901
608-742-2169 (Office) • 608-742-2592 (Fax)
www.generalengineering.net

This document contains confidential or proprietary information of General Engineering Company. Neither this document nor the information herein is to be reproduced, distributed, used or disclosed either in whole or in part except as specifically authorized by General Engineering Company.

TITLE PAGE
Shorewood Hills North -- Phase III
Street & Utility Construction
Town of Lake Mills
Jefferson County, WI

REVISIONS	NO.	BY	DATE
Addendum 1	1	KCW	7/5/16

ISSUE DATE:

DRAWN BY SRR
DATE June 2016
GEC FILE NO. 0500-44D
SHEET NO.
G1.0

G:\Current Files E-K\Forest Landscaping and Construction, Inc. 0500-44D\CAD 0500-44D\2_CIVIL\Production Drawings\2_Const. Plan Sets\JUNE 2016\0-G1.0-TP-0500-44D.dwg, 7/11/2016 10:26:41 AM, 1:1

PRELIMINARY NOT FOR CONSTRUCTION

CONSTRUCTION NOTES

GENERAL

1. ALL EXISTING UNDERGROUND UTILITY LOCATIONS SHOWN ARE APPROXIMATE AND SHOULD BE FIELD VERIFIED, BY CONTRACTOR, PRIOR TO CONSTRUCTION.
2. THE CONTRACTOR SHALL PROVIDE A MINIMUM OF 48 HOURS NOTICE TO ALL AFFECTED RESIDENTS FOR ALL PLANNED WATER AND/OR SEWER SERVICE OUTAGES.
3. ALL ASPHALT REPAIRS/REPLACEMENT SHALL BE SAWCUT TO MATCH EXISTING PAVEMENT AS SHOWN ON THE PLANS OR AS DIRECTED BY THE ENGINEER.

SANITARY SEWER

1. EXISTING SANITARY SEWER LOCATIONS, SIZES, AND TYPES SHOULD BE FIELD VERIFIED BY THE CONTRACTOR PRIOR TO MAKING ANY CONNECTIONS.
2. FOR NEW SERVICE LATERALS, INSTALL A TRACER WIRE TERMINAL BOX AT THE STREET RIGHT-OF-WAY.
3. SERVICE LATERALS SHALL BE 4" PVC UNLESS OTHERWISE INDICATED.
4. ALL LATERAL CONNECTIONS TO NEW MAIN SHALL BE MADE WITH WYE CONNECTIONS.

STORM SEWER

1. STORM SEWER PIPE LENGTHS ARE SHOWN MEASURED FROM INSIDE OF STRUCTURE TO INSIDE OF STRUCTURE.

GRADING & EROSION CONTROL NOTES

1. ALL EROSION CONTROL MEASURES SHALL BE IN PLACE PRIOR TO CONSTRUCTION.
2. SILT FENCE, & ROCK CONSTRUCTION ENTRANCES SHALL BE INSTALLED PRIOR TO ANY LAND DISTURBING ACTIVITIES, INCLUDING CLEARING & GRUBBING.
3. ALL STORM SEWER CULVERTS SHALL HAVE STONE CULVERT PROTECTION INSTALLED UPON CULVERT INSTALLATION.
4. CONTRACTOR IS RESPONSIBLE FOR WEEKLY DNR INSPECTION REPORTS IN ACCORDANCE WITH NR 216.46(9).
5. ADDITIONAL EROSION CONTROL MEASURES MAY BE ADDED ON AN AS-NEEDED BASIS.
6. ANY AREAS WHERE GRADING IS COMPLETE SHALL BE STABILIZED WITH FERTILIZER, SEED, & MULCH AS SOON AS POSSIBLE.
7. ALL BEST MANAGEMENT PRACTICES WILL BE INSTALLED BY THE TIME THE CONSTRUCTION SITE IS CONSIDERED STABILIZED.
8. A COPY OF THIS EROSION CONTROL PLAN SHALL BE KEPT ON SITE THROUGHOUT THE DURATION OF THE PROJECT.
9. STOCKPILES LEFT INACTIVE FOR 7 DAYS SHALL BE SEEDED AND SURROUNDED BY SILT FENCE.
10. ALL WASTE AND UNUSED BUILDING MATERIALS (INCLUDING GARBAGE, DEBRIS, CLEANING WASTES, OR OTHER CONSTRUCTION MATERIALS) SHALL BE PROPERLY DISPOSED OF AND NOT ALLOWED TO BE CARRIED BY RUNOFF INTO RECEIVING CHANNEL.
11. EROSION CONTROL MAT CLASS I, TYPE A WILL BE USED IN NON-CHANNEL AREAS AND CLASS I, TYPE B WILL BE USED IN CHANNEL AREAS.
12. ALL DEWATERING PERMITTING, IF REQUIRED, IS THE RESPONSIBILITY OF THE CONTRACTOR AND SHALL BE IN ACCORDANCE WITH DNR TECHNICAL STANDARD 1061.
13. WHEN WORKING WITHIN 50' OF THE WETLAND, SPECIAL CARE NEEDS TO BE TAKEN AS TO NOT DISTURB ANY WETLAND FEATURES.
14. STREETS SHALL BE SWEPT AT THE END OF EACH WORK DAY OR AS DIRECTED BY THE MUNICIPALITY.
15. TRACKING PADS SHALL BE USED AT THE CONSTRUCTION ENTRANCE AND EXITS.
16. ALTHOUGH ROCK CONSTRUCTION TRACKING PADS MAY NOT BE SHOWN ON THE PLANS, THE CONTRACTOR SHALL INSTALL THEM AS NECESSARY OR AS DIRECTED BY THE ENGINEER TO MINIMIZE TRACKING ONTO ADJACENT STREETS. THESE PADS ARE CONSIDERED INCIDENTAL TO THE WORK AND WILL NOT BE MEASURED OR PAID FOR SEPARATELY.
17. CONTRACTOR WILL BE RESPONSIBLE FOR ALL DUST CONTROL.
18. ALL BANK AREAS DISTURBED SHALL BE STABILIZED WITH EROSION CONTROL MAT IMMEDIATELY.
19. ALL FILL PLACED UNDER BUILDING AND PAVED AREAS SHALL BE STRUCTURALLY SOUND.
20. SEDIMENT WILL BE REMOVED FROM BEHIND SEDIMENT FENCES AND BARRIERS BEFORE IT REACHES A DEPTH THAT IS EQUAL TO HALF THE BARRIER'S HEIGHT.
21. BREAKS AND GAPS IN SEDIMENT FENCES AND BARRIERS WILL BE REPAIRED IMMEDIATELY. DECOMPOSING STRAW BALES WILL BE REPLACED (TYPICAL BALE LIFE IS THREE MONTHS).
22. ALL SEDIMENT THAT MOVES OFF-SITE DUE TO CONSTRUCTION ACTIVITY OR STORM EVENTS WILL BE CLEANED UP BEFORE THE END OF THE SAME WORKDAY.
23. ALL INSTALLED EROSION CONTROL PRACTICES WILL BE MAINTAINED UNTIL THE DISTURBED AREAS THEY PROTECT ARE STABILIZED.
24. ALL EROSION CONTROL MAT SHALL BE INSTALLED WITHIN 24 HOURS OF FINAL GRADES BEING ESTABLISHED.

EXISTING LINETYPES LEGEND

San	SANITARY SEWER
ST	STORM SEWER
WM	WATER MAIN
FM	FORCE MAIN
E	ELECTRIC
OE	OVERHEAD ELECTRIC
G	GAS
FO	FIBER OPTIC
T	TELEPHONE
TV	TV
x x x x	FENCE
	GUARD RAIL
GL GL GL	GRADING LIMITS
SF SF SF	SILT FENCE
DB DB DB	DOUBLE SEDIMENT BARRIER
	TRAIN TRACKS
	TREELINE

SYMBOLS LEGEND

- EXISTING MANHOLE
- PROPOSED MANHOLE
- EXISTING HYDRANT
- PROPOSED HYDRANT
- VALVE
- CURB STOP
- TRACER WIRE TERMINAL BOX
- WELL
- PROPERTY CORNER
- LIGHT POLE
- POWER / TELEPHONE POLE
- GUY WIRE
- UTILITY PEDESTAL
- SIGN
- SOIL BORING
- MONITORING WELL
- MAILBOX
- CAUTION — POTENTIAL HAZARD
- BENCHMARK
- GEC-CP # — CONTROL POINT
- DECIDUOUS TREE
- CONIFEROUS TREE
- HANDICAP SYMBOL

ABBREVIATION LIST

B-B = BACK TO BACK
BOC = BACK OF CURB
BOP = BOTTOM OF PIPE
BOW = BOTTOM OF WALL
C-C = CENTER TO CENTER
CL = CENTERLINE
CP = CONTROL POINT
DIA = DIAMETER
ELEV = ELEVATION
EOG = EDGE OF GRAVEL
EOP = EDGE OF PAVEMENT
EX = EXISTING
FL = FLOW LINE
FM = FORCE MAIN
HC = HORIZONTAL CURVE
HP = HIGH POINT
IE = INVERT ELEVATION
INL = INLET
INV = INVERT
IOS = INSIDE OF STRUCTURE
L = LENGTH
LN = LINE
LP = LOW POINT
MH = MANHOLE
MIN = MINIMUM
MP = MIDPOINT
PC = POINT OF CURVE
PI = POINT OF INTERSECTION
PRO = PROPOSED
PT = POINT OF TANGENT
PVC = POINT OF VERTICAL CURVE
PVI = POINT OF VERTICAL INTERSECTION
PVMT = PAVEMENT
PVT = POINT OF VERTICAL TANGENT
R = RADIUS
ROW = RIGHT OF WAY
S = SANITARY SEWER SERVICE LATERAL
SAN = SANITARY SEWER
SE = SPOT ELEVATION
ST = STORM SEWER
STA = STATION
STD = STANDARD
TC = TOP OF CURB
TOP = TOP OF PIPE
TOW = TOP OF WALL
TYP = TYPICAL
UOS = UNLESS OTHERWISE SPECIFIED
VC = VERTICAL CURVE
W = WATER MAIN SERVICE LATERAL
WM = WATER MAIN

DIGGERS HOTLINE NOTE

Member One-Call System Information

To Obtain Location of Participants Underground Facilities Before You Dig in Wisconsin

CALL DIGGERS HOTLINE
1-800-242-8511

Wis Statute 182.0175 (1974)
Requires Min. 3 Work Days
Notice Before You Excavate

OWNER

KASON, LLC
c/o JASON FOREST
W8583 FINCH BROTHERS ROAD
LAKE MILLS, WI 53551
PHONE: (920)648-8704

UTILITIES

1. **ELECTRIC**
   CITY OF LAKE MILLS
   307 N CP AVE.
   LAKE MILLS, WI 53551
   PHONE: (920) 648-4026
2. **TELEPHONE**
   FRONTIER
   100 COMMUNICATIONS DR.
   SUN PRAIRIE, WI 53590
   PHONE: (608) 837-1616
3. **GAS**
   WE ENERGIES
   P O BOX 2046
   MILWAUKEE, WI 54201
   PHONE: (800) 242-9137
4. **CABLE TV**
   CHARTER COMMUNICATIONS
   2701 DANIELS ST.
   MADISON, WI 53718
   PHONE: (608) 274-3822
   CONTACT: RANDY STEUER
5. **SEWER**
   LAKE MILLS WWTF
   200 D WATER ST.
   LAKE MILLS, WI 53551
   PHONE: (920) 648-2344
   CONTACT: STEVE WILKE, CITY MANAGER
6. **MUNICIPALITY**
   TOWN OF LAKE MILLS
   1111 S. MAIN ST.
   LAKE MILLS, WI 53551
   PHONE: (920) 648-5867

GEC
General Engineering Company
P.O. Box 340 • 916 Silver Lake Dr. • Portage, WI 53901
608-742-2169 (Office) • 608-742-2592 (Fax)
www.generalengineering.net

This document contains confidential or proprietary information of General Engineering Company. Neither this document nor the information contained herein is to be used, reproduced or disclosed either in whole or in part except as specifically authorized by General Engineering Company.

NOTES & LEGEND
Shorewood Hills North -- Phase III
Street & Utility Construction

Town of Lake Mills
Jefferson County, WI

REVISIONS	NO.	BY	DATE

SCALE

DRAWN BY SRR
DATE June 2016
GEC FILE NO. 0500-44D
SHEET NO.
G1.1

G:\Current Files E-K\Forest Landscaping and Construction, Inc. 0500-44D\CAD 0500-44D\2_CIVIL\Production Drawings\2_Const. Plan Sets\JUNE 2016\0-G1.1-N&L-0500-44D.dwg, 6/13/2016 3:13:01 PM, 1:1

PRELIMINARY NOT FOR CONSTRUCTION

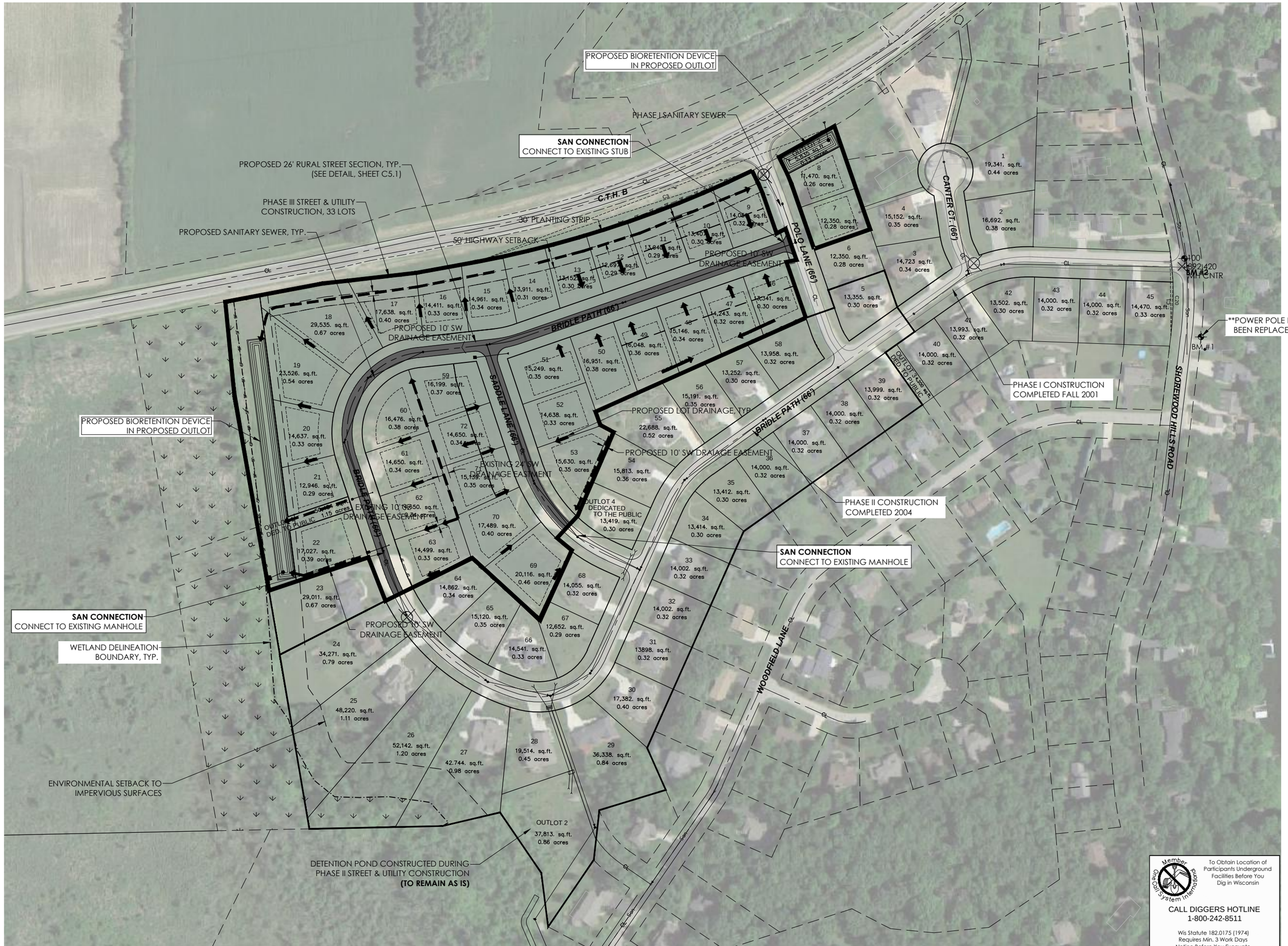

To Obtain Location of Participants Underground Facilities Before You Dig in Wisconsin

CALL DIGGERS HOTLINE
1-800-242-8511

Wis Statute 182.0175 (1974)
Requires Min. 3 Work Days
Notice Before You Excavate

GEC

General Engineering Company

P.O. Box 340 • 916 Silver Lake Dr. • Portage, WI 53901
608-742-2169 (Office) • 608-742-2592 (Fax)
www.generalengineering.net

This document contains confidential or proprietary information of General Engineering Company. Neither this document nor the information herein is to be reproduced, distributed, used or disclosed either in whole or in part except as specifically authorized by General Engineering Company.

PROPOSED SITE PLAN
Shorewood Hills North -- Phase III Street & Utility Construction

Town of Lake Mills
Jefferson County, WI

REVISIONS	NO.	BY	DATE

N W E S

0 200
SCALE

DRAWN BY	SRR
REVIEWED BY	KDA
ISSUE DATE	June 2016
GEC FILE NO.	0500-44D
SHEET NO.	C1.0

G:\Current Files E-K\Forest Landscaping and Construction, Inc. 0500-44D\CAD 0500-44D\2_CIVIL\Production Drawings\2_Const. Plan Sets\JUNE 2016\1-C1.0-PSP-0500-44D.dwg, 6/10/2016 11:35:32 AM, 1:1

PRELIMINARY NOT FOR CONSTRUCTION

GENERAL NOTES:

1. DITCH EROSION CONTROL SHALL BE SEED AND MULCH UNLESS OTHERWISE SHOWN.
2. CONTRACTOR SHALL PROVIDE INLET/CULVERT PROTECTION IMMEDIATELY FOLLOWING INLET/CULVERT CONSTRUCTION.
3. LOCATION OF EXISTING UNDERGROUND UTILITIES SHOWN ARE APPROXIMATE AND SHOULD BE FIELD VERIFIED PRIOR TO CONSTRUCTION
4. FUTURE HOUSE FOOTPRINTS AT THE FRONT OF SETBACKS AND DRIVEWAYS ARE SHOWN FOR REFERENCE ONLY.

FUTURE LOT DRAINAGE (BY HOMEOWNERS)

PROPOSED SWALES (BY DEVELOPER/CONTRACTOR)

PROPOSED DITCH CHECKS

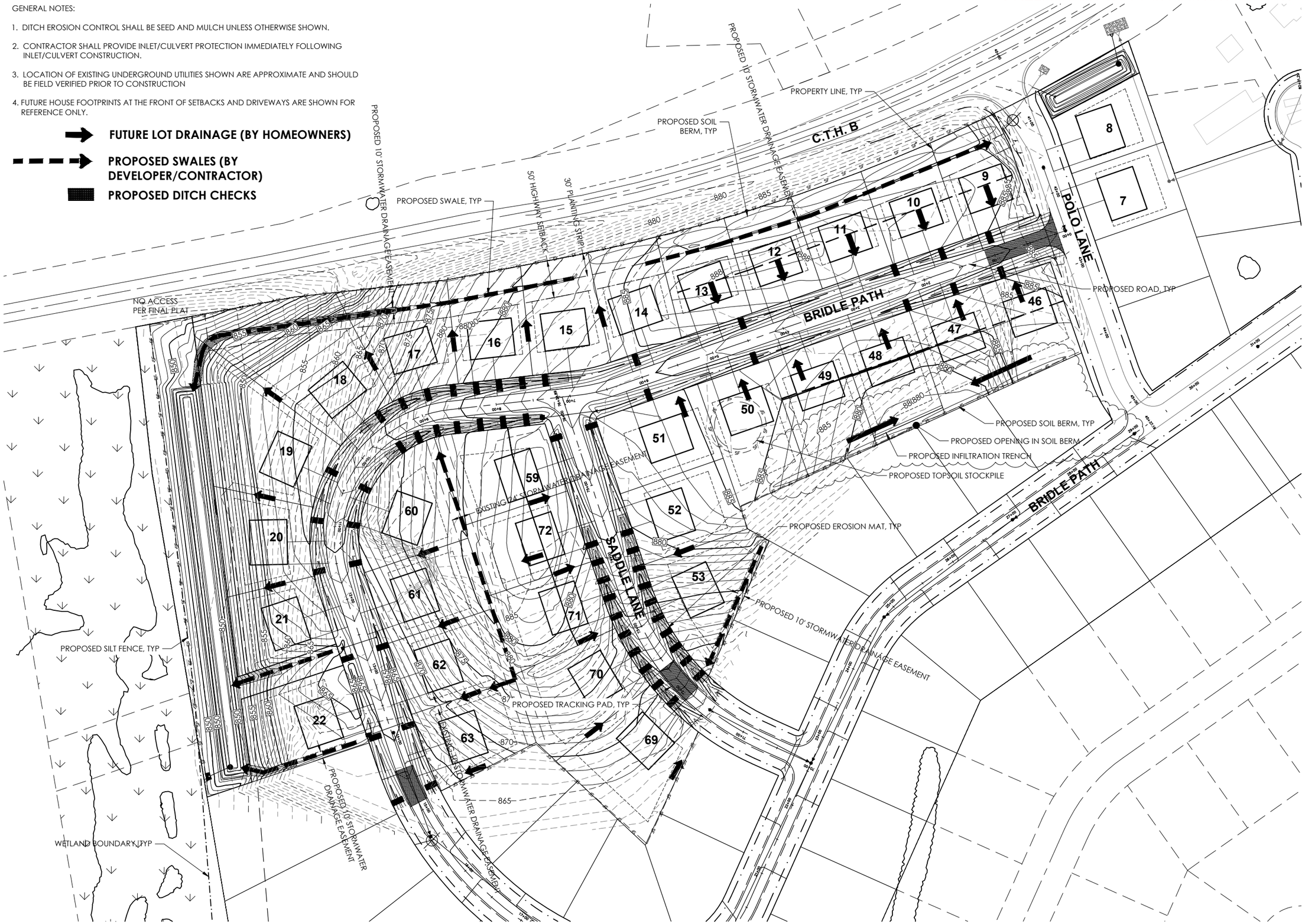

GEC

General Engineering Company

P.O. Box 340 • 916 Silver Lake Dr. • Portage, WI 53901
608-742-2169 (Office) • 608-742-2592 (Fax)
www.generalengineering.net

This documes contains confidential or proprietary information of General Engineering Company. Unauthorized use or disclosure of the information contained herein is prohibited. This document may not be reproduced either in whole or in part except as specifically authorized by General Engineering Company.

EROSION CONTROL & GRADING
Shorewood Hills North -Phase III
Street & Utility Construction

Town of Lake Mills
Jefferson County, WI

REVISIONS	NO.	BY	DATE
Addendum 1	1	KCW	7/5/16

N
W E
S
0 120
SCALE

DRAWN BY	KCW
REVIEWED BY	KDA
ISSUE DATE	June 2016
GEC FILE NO.	0500-44
SHEET NO.	C2.0

G:\Current Files E-K\Forest Landscaping and Construction, Inc. 0500-44D\CAD 0500-44D\2_CIVIL\Production Drawings\2_Const. Plan Sets\JUNE 2016\1-C2.0-EC-0500-44D.dwg, 7/6/2016 11:31:35 AM, 1:1

PRELIMINARY NOT FOR CONSTRUCTION

GENERAL NOTES:

1. DITCH EROSION CONTROL SHALL BE SEED AND MULCH UNLESS OTHERWISE SHOWN.
2. CONTRACTOR SHALL PROVIDE INLET/CULVERT PROTECTION IMMEDIATELY FOLLOWING INLET/CULVERT CONSTRUCTION.
3. LOCATION OF EXISTING UNDERGROUND UTILITIES SHOWN ARE APPROXIMATE AND SHOULD BE FIELD VERIFIED PRIOR TO CONSTRUCTION.
4. FUTURE HOUSE FOOTPRINTS AT THE FRONT SETBACK AND DRIVEWAYS ARE SHOWN FOR REFERENCE ONLY

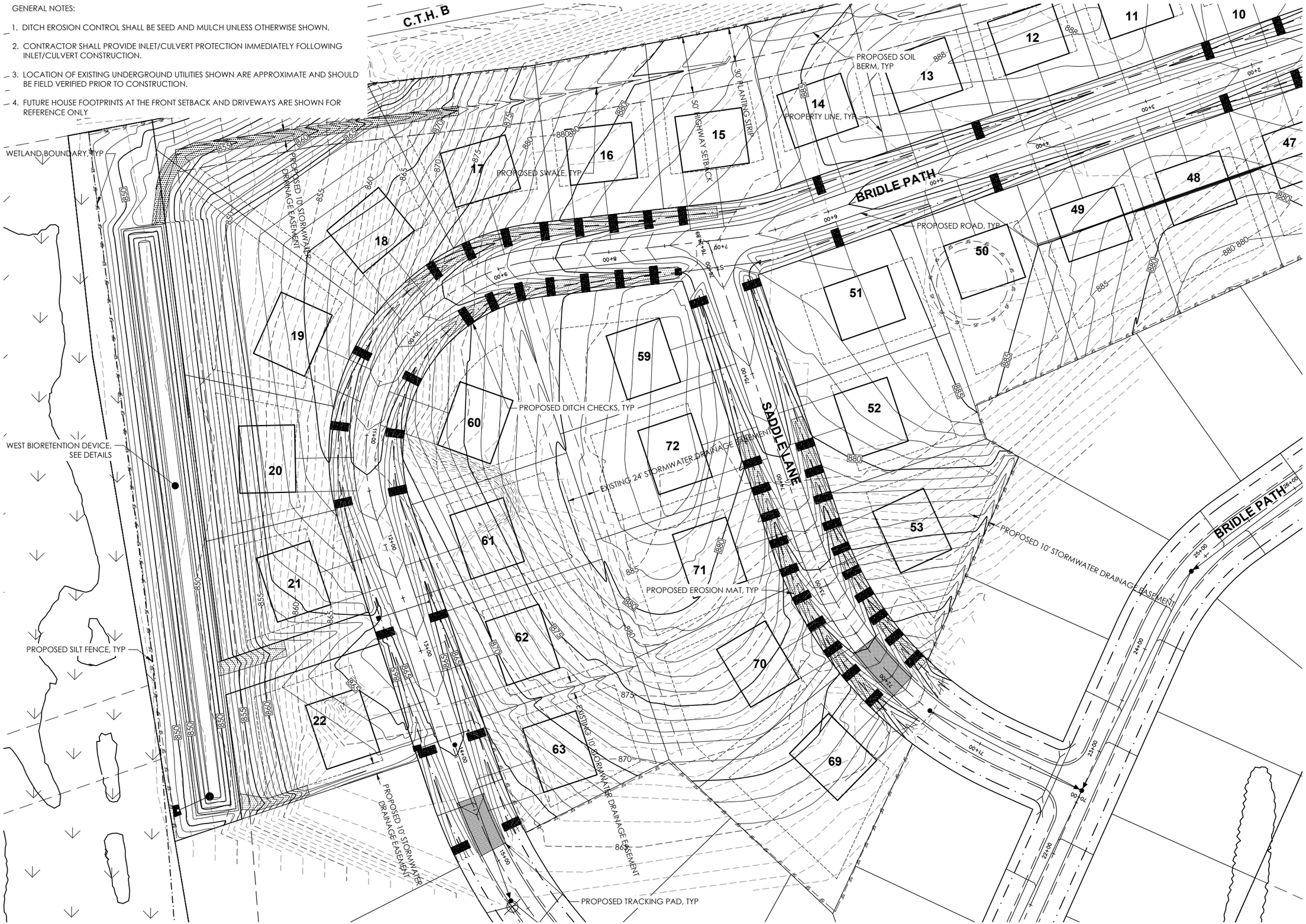

GEC

General Engineering Company

P.O. Box 340 • 916 Silver Lake Dr. • Portage, WI 53901
608-742-2169 (Office) • 608-742-2592 (Fax)
www.generalengineering.net

This document contains confidential or proprietary information of General Engineering Company. It is transmitted for the exclusive use of the addressee. Any other disclosure, reproduction, or distribution is prohibited either in whole or in part except as specifically authorized by General Engineering Company.

EROSION CONTROL & GRADING

Shorewood Hills North -Phase III Street & Utility Construction

Town of Lake Mills
Jefferson County, WI

REVISIONS	NO.	BY	DATE

N W E S

0 80
SCALE

DRAWN BY	KCW
REVIEWED BY	KDA
ISSUE DATE	June 2016
GEC FILE NO.	0500-44
SHEET NO.	C2.1

G:\Current Files E-K\Forest Landscaping and Construction, Inc. 0500-44D\CAD 0500-44D\2_CIVIL\Production Drawings\2_Const. Plan Sets\JUNE 2016\1-C2.0-EC-0500-44D.dwg, 6/13/2016 2:40:32 PM,
1:1

PRELIMINARY NOT FOR CONSTRUCTION

GENERAL NOTES:

1. DITCH EROSION CONTROL SHALL BE SEED AND MULCH UNLESS OTHERWISE SHOWN.
2. CONTRACTOR SHALL PROVIDE INLET/CULVERT PROTECTION IMMEDIATELY FOLLOWING INLET/CULVERT CONSTRUCTION.
3. LOCATION OF EXISTING UNDERGROUND UTILITIES SHOWN ARE APPROXIMATE AND SHOULD BE FIELD VERIFIED PRIOR TO CONSTRUCTION
4. FUTURE HOUSE FOOTPRINTS AT THE FRONT SETBACK AND DRIVEWAYS ARE SHOWN FOR REFERENCE ONLY

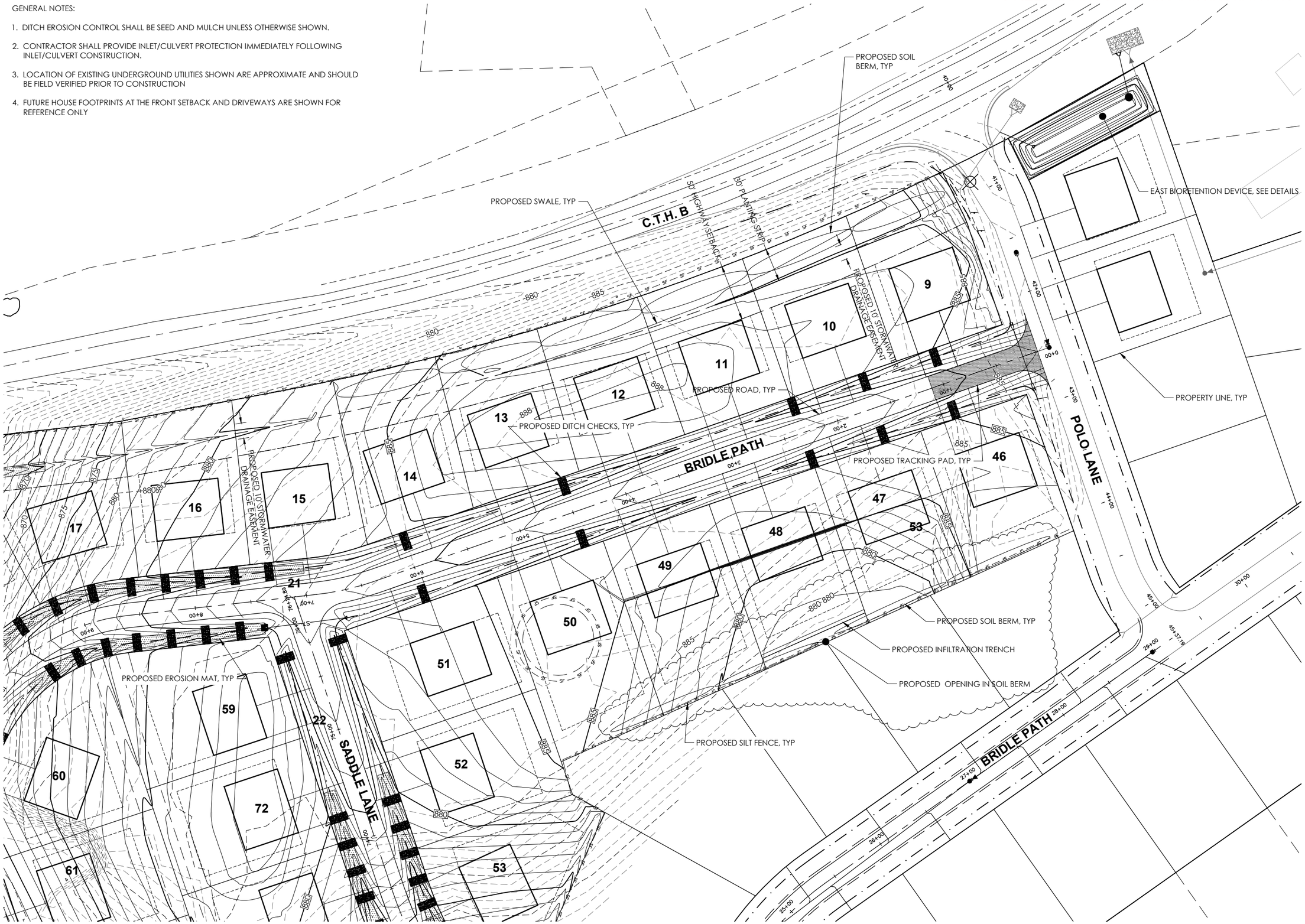

GEC

General Engineering Company

P.O. Box 340 • 916 Silver Lake Dr. • Portage, WI 53901
608-742-2169 (Office) • 608-742-2592 (Fax)
www.generalengineering.net

This document contains confidential or proprietary information of General Engineering Company. It is for internal use only. Any other use, in whole or in part, without the express written consent of General Engineering Company is prohibited.

EROSION CONTROL & GRADING

Shorewood Hills North -Phase III Street & Utility Construction

Town of Lake Mills
Jefferson County, WI

REVISIONS	NO.	BY	DATE
Addendum 1	1	KCW	7/5/16

N
W E
S
0 80
SCALE

DRAWN BY	KCW
REVIEWED BY	KDA
ISSUE DATE	June 2016
GEC FILE NO.	0500-44
SHEET NO.	C2.2

G:\Current Files E-K\Forest Landscaping and Construction, Inc. 0500-44D\CAD 0500-44D\2_CIVIL\Production Drawings\2_Const. Plan Sets\JUNE 2016\1-C2.0-EC-0500-44D.dwg, 7/6/2016 11:31:59 AM, 1:1

PRELIMINARY NOT FOR CONSTRUCTION

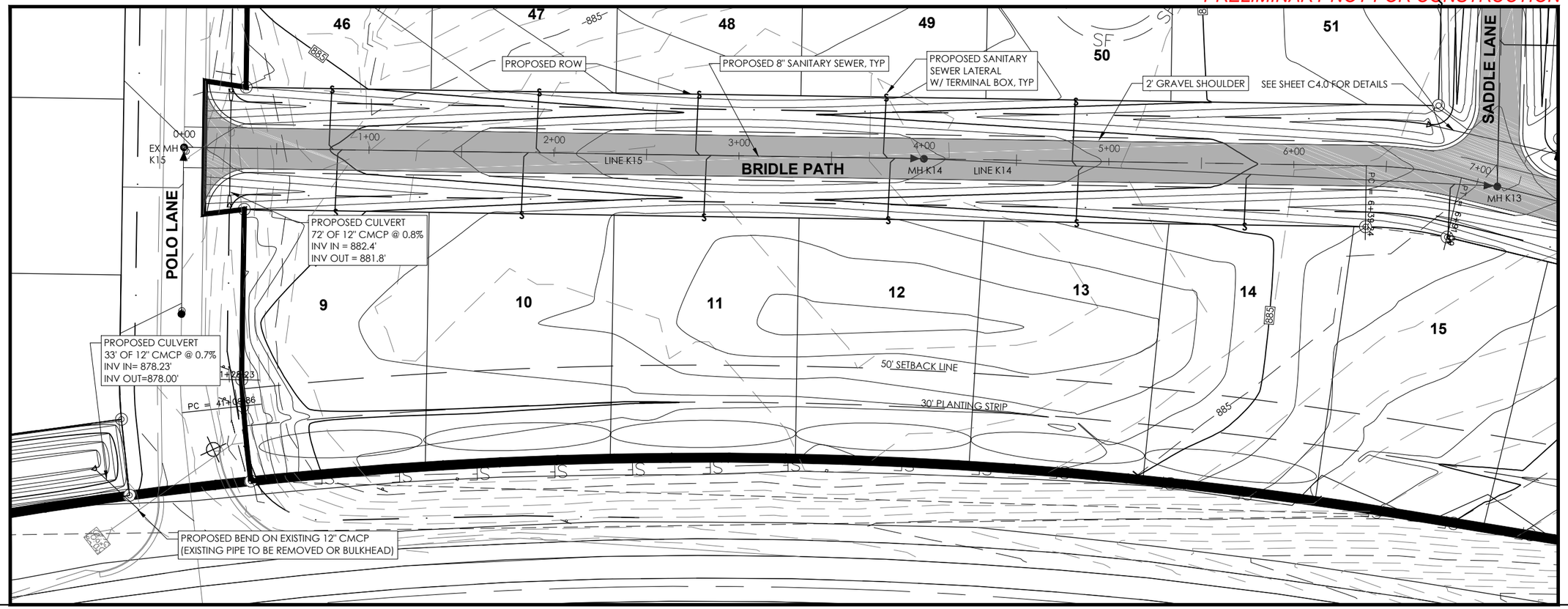

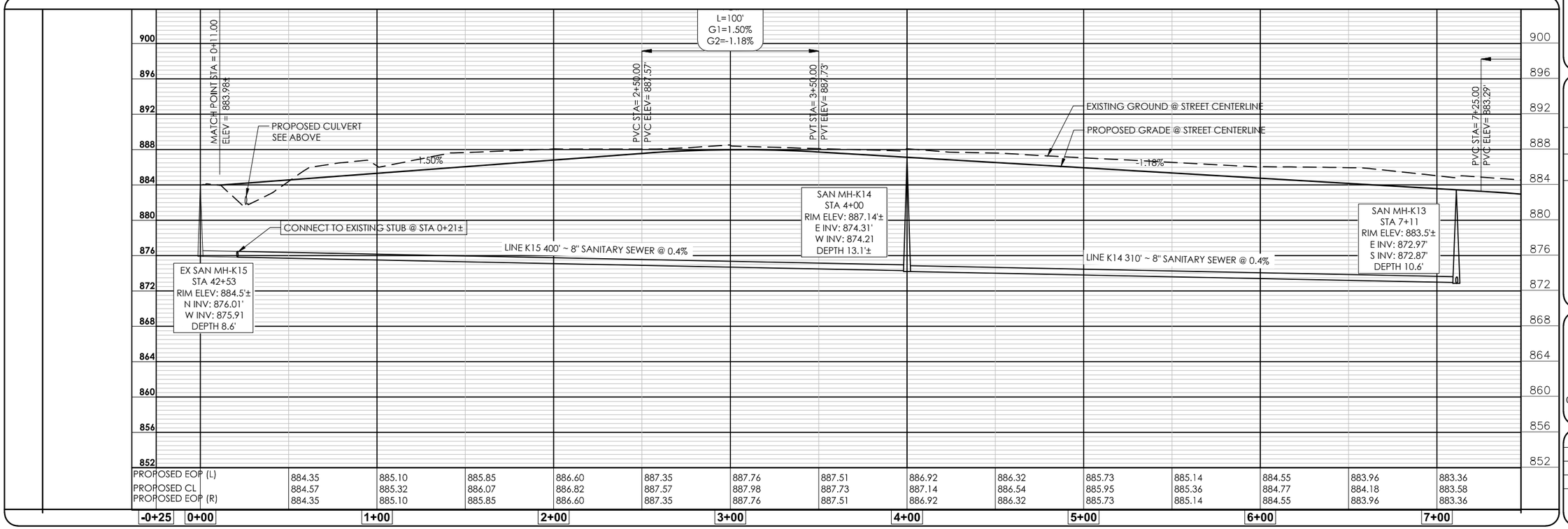

PROPOSED EOP (L)		884.35	885.10	885.85	886.60	887.35	887.76	887.51	886.92	886.32	885.73	885.14	884.55	883.96	883.36
PROPOSED CL		884.57	885.32	886.07	886.82	887.57	887.98	887.73	887.14	886.54	885.95	885.36	884.77	884.18	883.58
PROPOSED EOP (R)		884.35	885.10	885.85	886.60	887.35	887.76	887.51	886.92	886.32	885.73	885.14	884.55	883.96	883.36
	-0+25	0+00	1+00		2+00		3+00		4+00		5+00		6+00		7+00

GEC

General Engineering Company

P.O. Box 340 • 916 Silver Lake Dr. • Portage, WI 53901
608-742-2169 (Office) • 608-742-2592 (Fax)
www.generalengineering.net

This documes contains confiential or proprietary information of General Engineering Company. Neither the information nor the design represented herein shall be used or reproduced either in whole or in part except as specifically authorized by General Engineering Company.

BRIDLE PATH PLAN & PROFILE

Shorewood Hills North -- Phase III
Street & Utility Construction

Town of Lake Mills
Jefferson County, WI

NO.	REVISIONS	BY	DATE

S E W N

0 60
SCALE

DRAWN BY	KCW
REVIEWED BY	KDA
ISSUE DATE	June 2016
GEC FILE NO.	0500-44D
SHEET NO.	C3.0

G:\Current Files E-K\Forest Landscaping and Construction, Inc. 0500-44D\CAD 0500-44D\2_CIVIL\Production Drawings\2_Const. Plan Sets\JUNE 2016\1-C3.0-PP-0500-44D.dwg, 6/15/2016 11:05:41 AM,
1:1

PRELIMINARY NOT FOR CONSTRUCTION

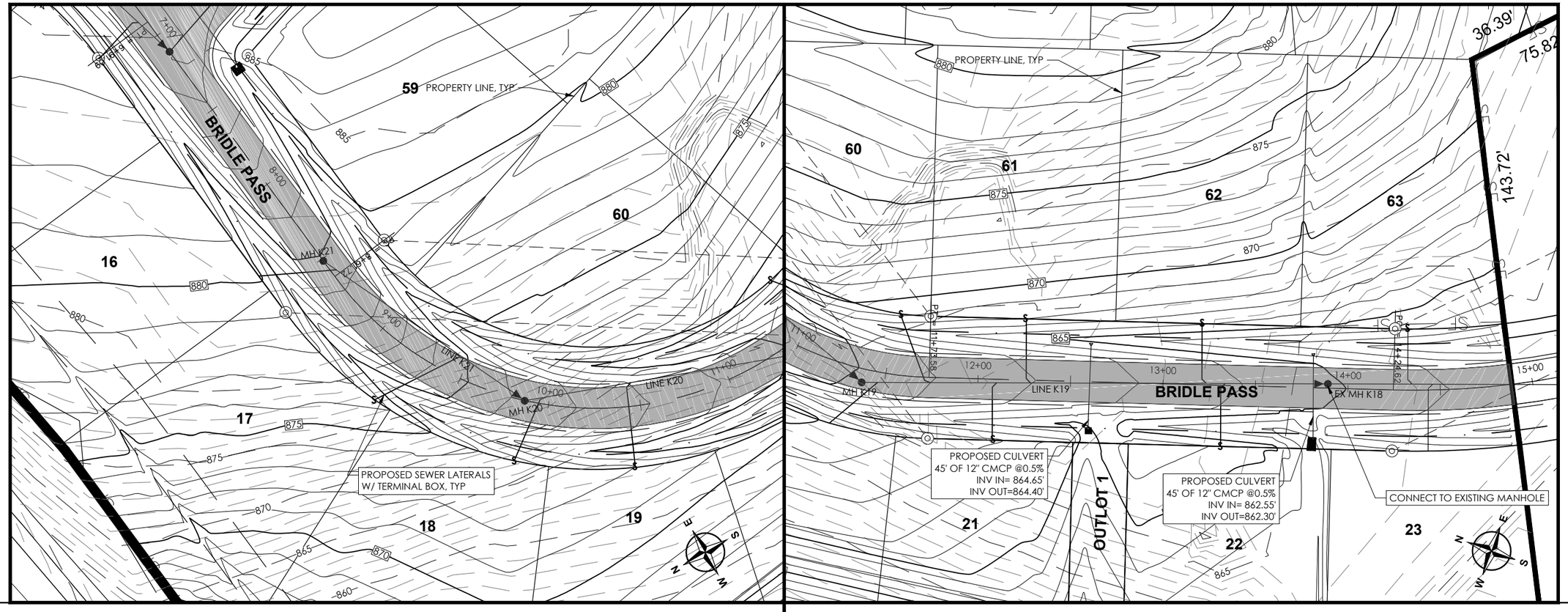

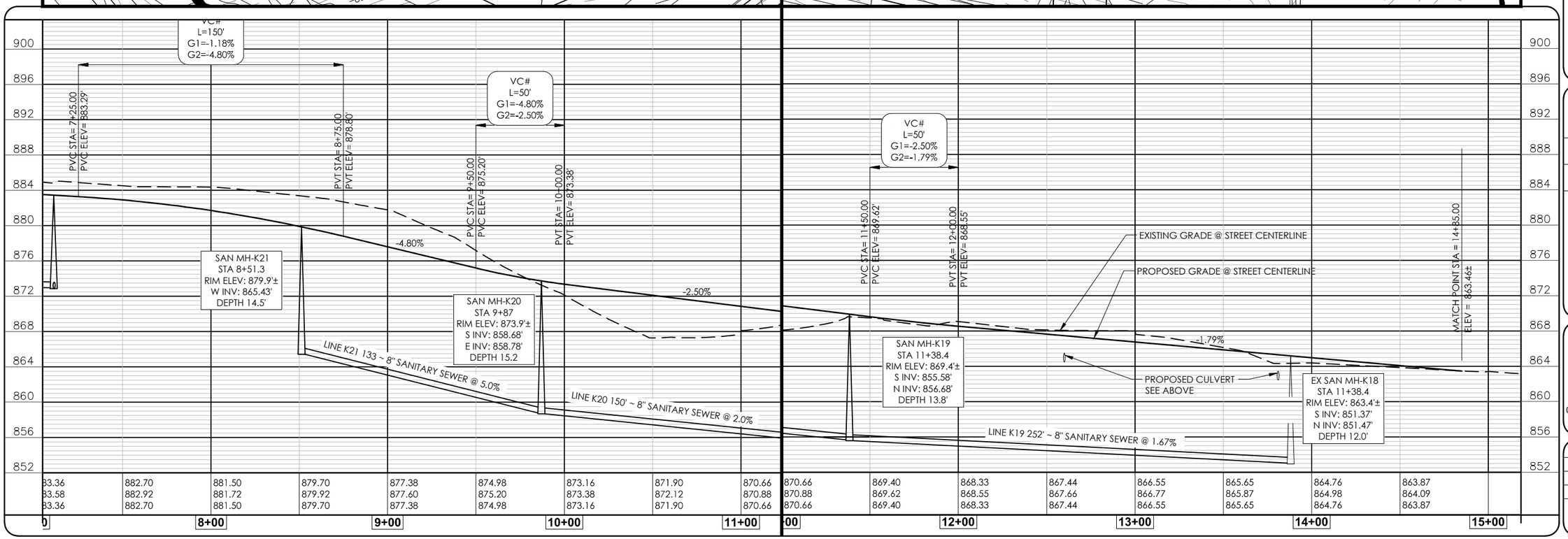

General Engineering Company
P.O. Box 340 • 916 Silver Lake Dr. • Portage, WI 53901
608-742-2169 (Office) • 608-742-2592 (Fax)
www.generalengineering.net

This document contains confidential or proprietary information of General Engineering Company. Neither this document nor the information herein is to be reproduced, distributed, used or disclosed either in whole or in part except as specifically authorized by General Engineering Company.

BRIDLE PATH PLAN & PROFILE
Shorewood Hills North -- Phase III
Street & Utility Construction

Town of Lake Mills
Jefferson County, WI

REVISIONS	NO.	BY	DATE

0 60
SCALE

DRAWN BY	KCW
REVIEWED BY	KDA
ISSUE DATE	June 2016
GEC FILE NO.	0500-44D
SHEET NO.	C3.1

G:\Current Files E-K\Forest Landscaping and Construction, Inc. 0500-44D\CAD 0500-44D\2_CIVIL\Production Drawings\2_Const. Plan Sets\JUNE 2016\1-C3.0-PP-0500-44D.dwg, 6/15/2016 11:02:47 AM, 1:1

PRELIMINARY NOT FOR CONSTRUCTION

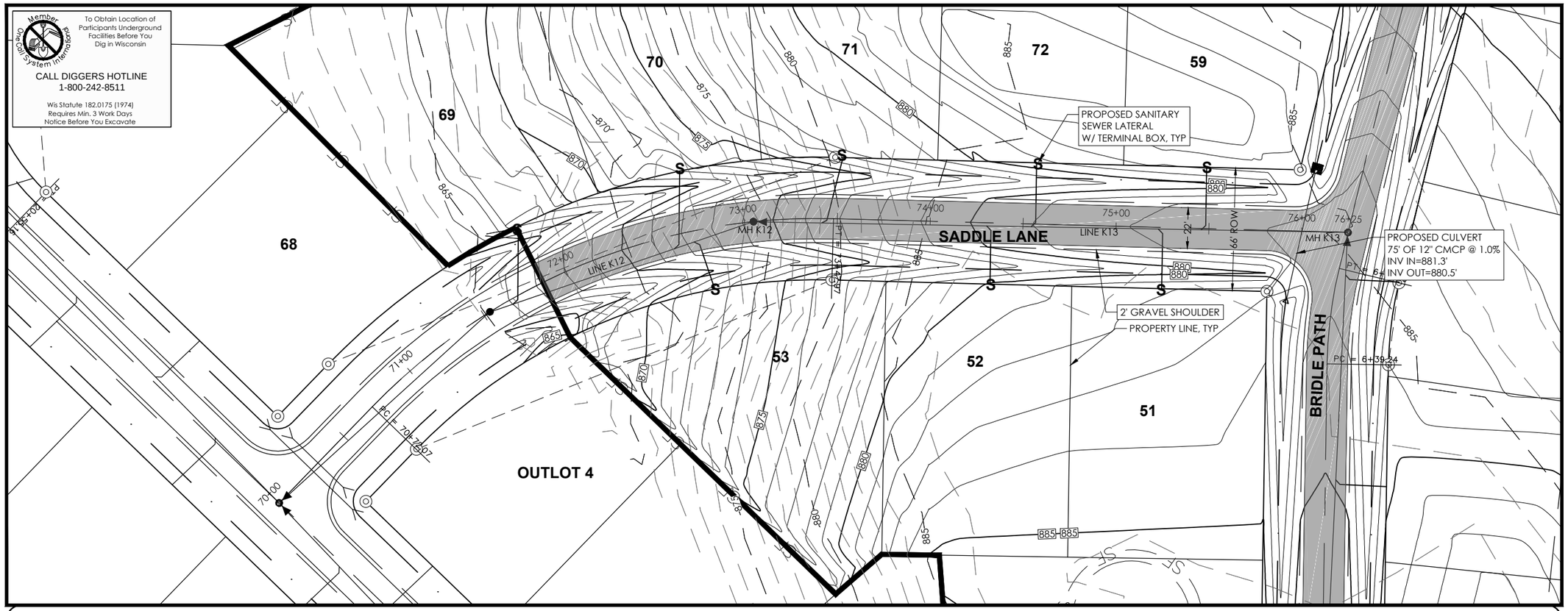

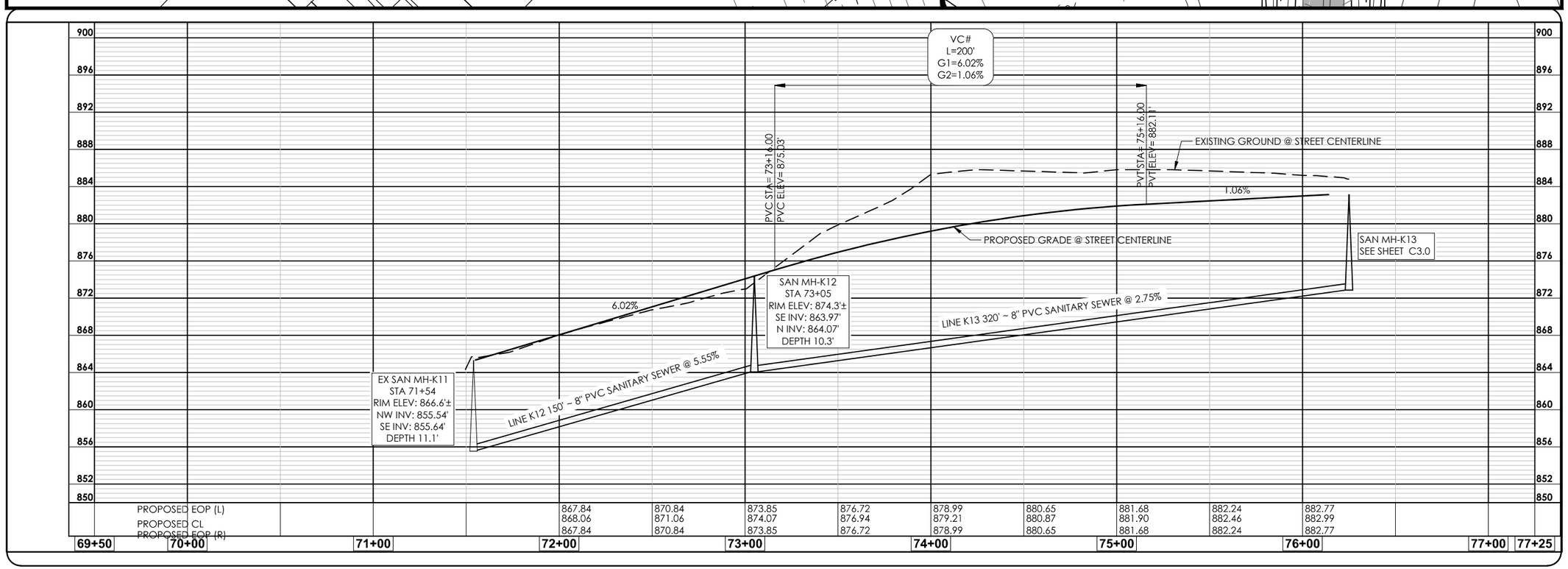

GEC

General Engineering Company

P.O. Box 340 • 916 Silver Lake Dr. • Portage, WI 53901
608-742-2169 (Office) • 608-742-2592 (Fax)
www.generalengineering.net

This documes contains confidential or proprietary information of General Engineering Company. Modification or distribution in whole or in part without written consent of General Engineering Company is forbidden and only authorized by General Engineering Company.

SADDLE LANE PLAN & PROFILE

Shorewood Hills North -- Phase III
Street & Utility Construction

Town of Lake Mills
Jefferson County, WI

REVISIONS	NO.	BY	DATE

N W E S

0 60
SCALE

DRAWN BY	KCW
REVIEWED BY	KDA
ISSUE DATE	June 2016
GEC FILE NO.	0500-44D
SHEET NO.	C4.0

G:\Current Files E-K\Forest Landscaping and Construction, Inc. 0500-44D\CAD 0500-44D\2_CIVIL\Production Drawings\2_Const. Plan Sets\JUNE 2016\1-C4.0-PP-0500-44D.dwg, 6/15/2016 10:57:54 AM,
1:1

1+00.00

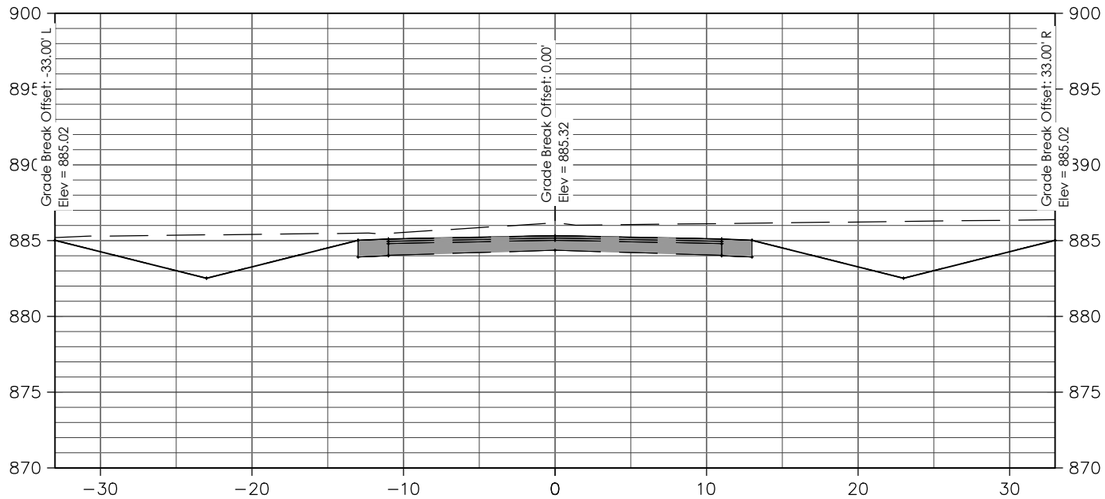

2+00.00

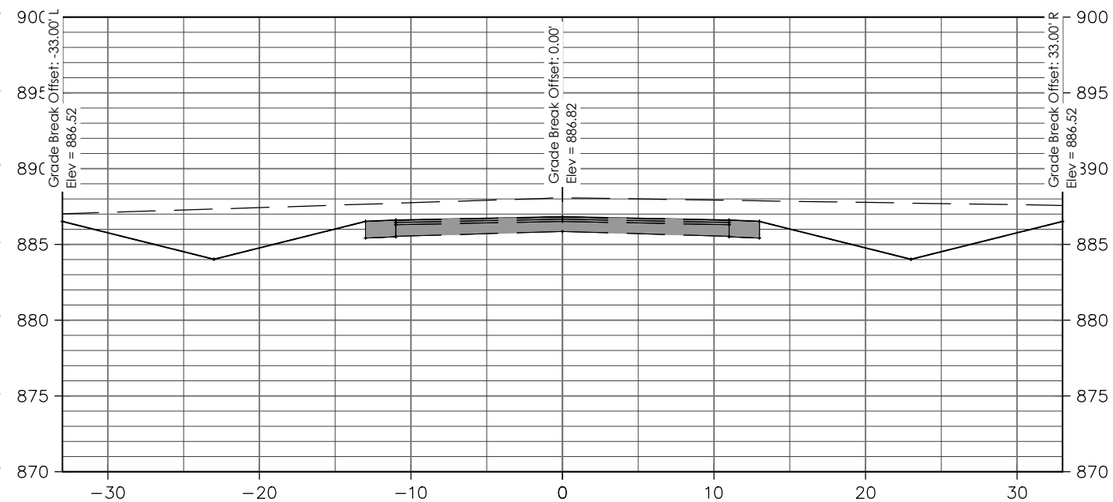

0+50.00

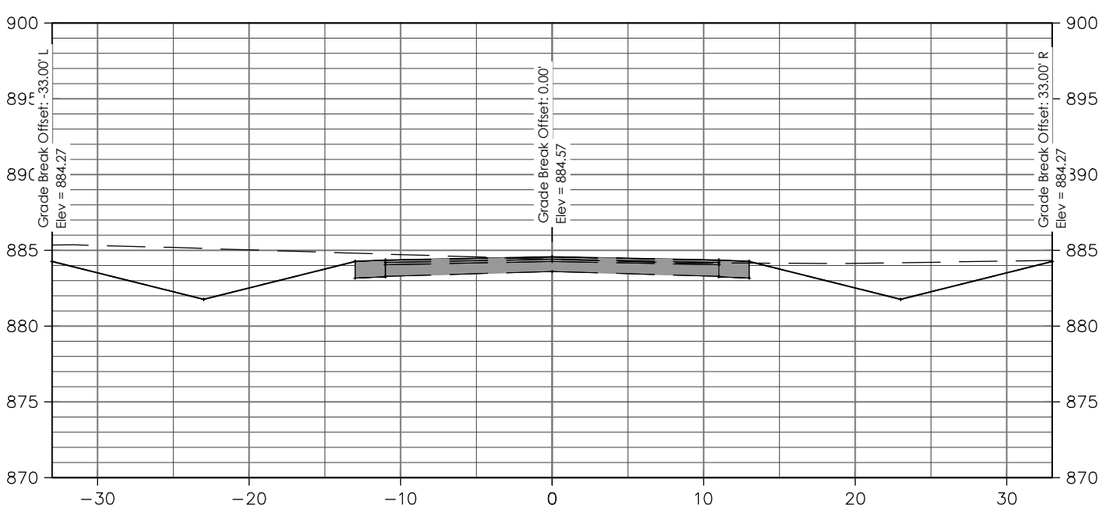

1+50.00

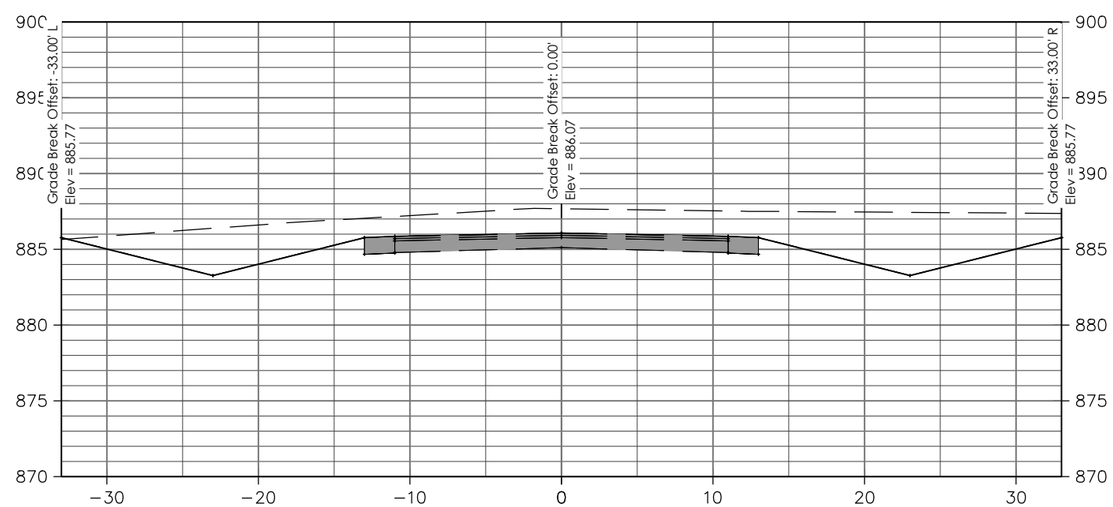

GEC

General Engineering Company

P.O. Box 340 • 916 Silver Lake Dr. • Portage, WI 53901

608-742-2169 (Office) • 608-742-2592 (Fax)

www.generalengineering.net

This documes contains confidential or proprietary information of General Engineering Company. Neither this document, nor any of its contents, may be used for any purpose other than that for which it is designed either in whole or in part except as specifically authorized by General Engineering Company.

BRIDLE PATH CROSS SECTIONS

Shorewood Hills North -- Phase III

Street & Utility Construction

Town of Lake Mills

Jefferson County, WI

REVISIONS	NO.	BY	DATE

N W E S

0 10

SCALE

DRAWN BY	KCW
REVIEWED BY	KDA
ISSUE DATE	June 2016
GEC FILE NO.	0500-44D
SHEET NO.	C5.0

G:\Current Files E-K\Forest Landscaping and Construction, Inc. 0500-44D\CAD 0500-44D\2_CIVIL\Source Drawings\Surfaces\0500-44D-FG.dwg, 6/9/2016 3:32:37 PM, 1:1

3+00.00

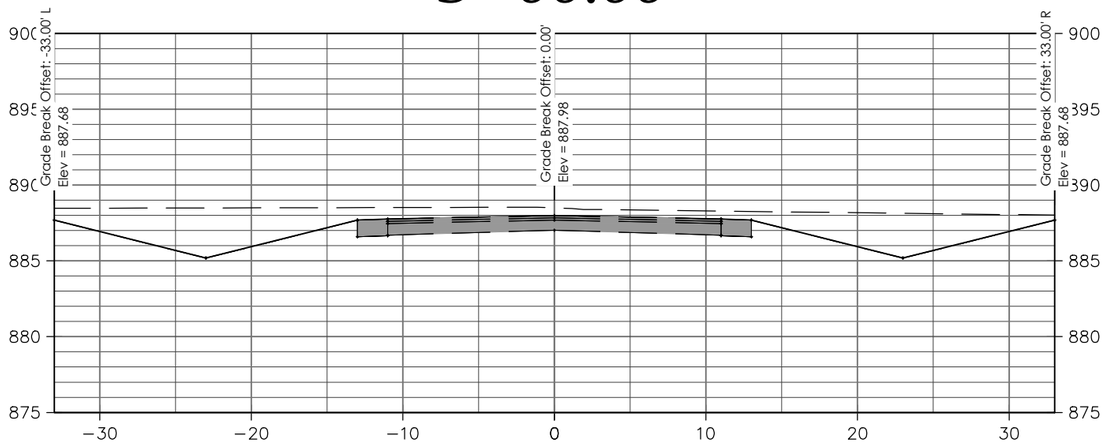

4+00.00

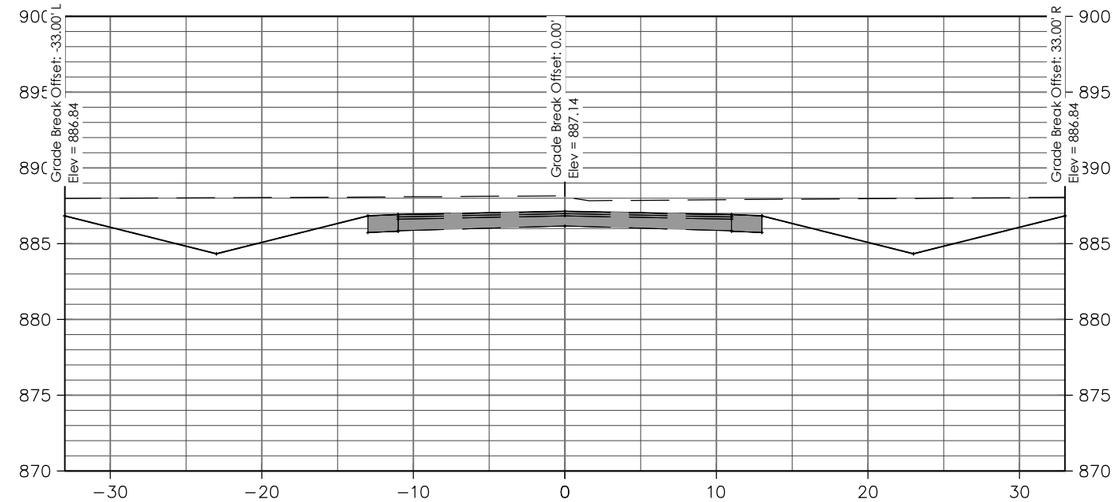

2+50.00

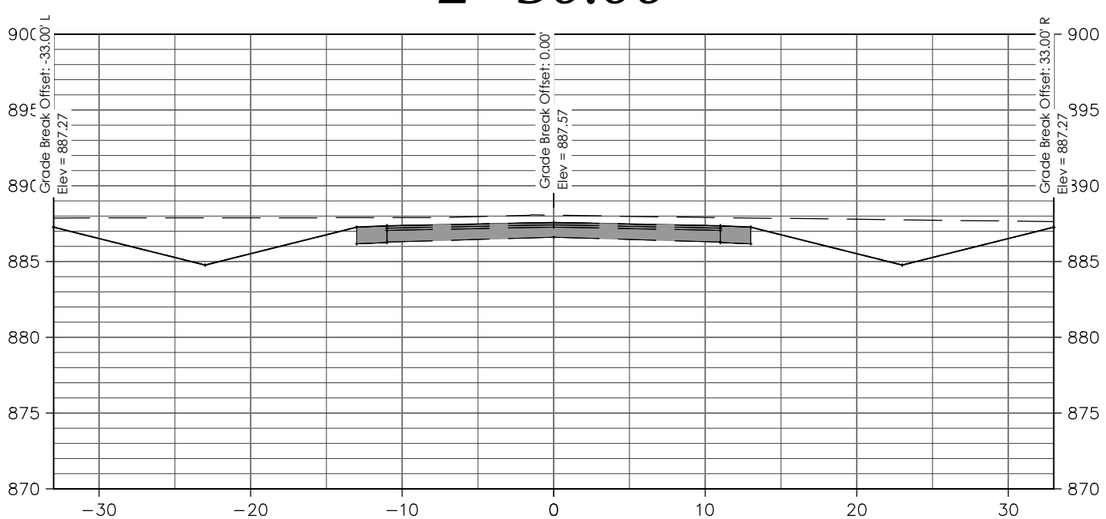

3+50.00

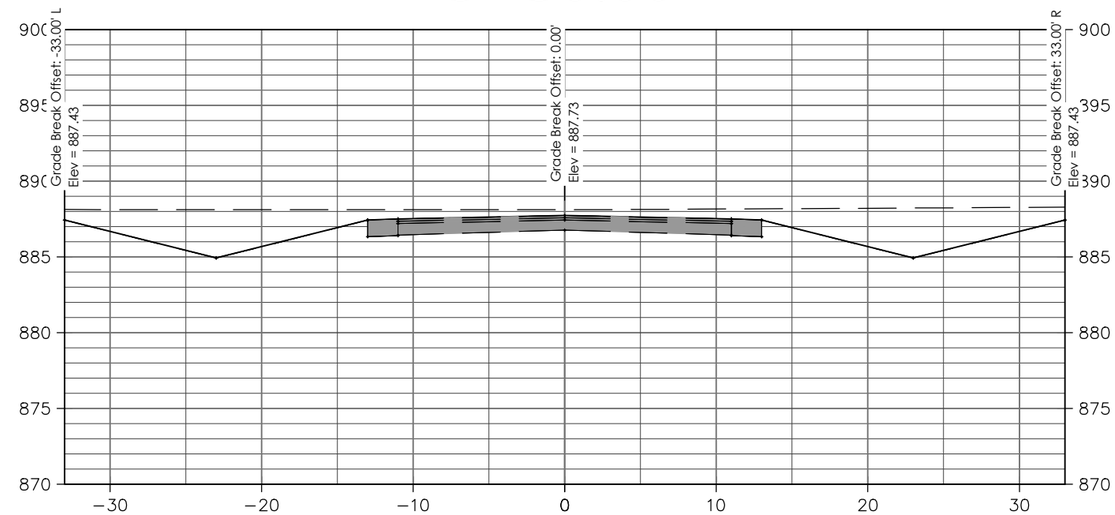

General Engineering Company

P.O. Box 340 • 916 Silver Lake Dr. • Portage, WI 53901
608-742-2169 (Office) • 608-742-2592 (Fax)
www.generalengineering.net

This document contains confidential or proprietary information of General Engineering Company. Neither this document nor the information herein is to be reproduced, distributed, used or disclosed either in whole or in part except as specifically authorized by General Engineering Company.

BRIDLE PATH CROSS SECTIONS

Shorewood Hills North -- Phase III
Street & Utility Construction

Town of Lake Mills
Jefferson County, WI

REVISIONS	NO.	BY	DATE

N
W E
S
0 10
SCALE

DRAWN BY	KCW
REVIEWED BY	KDA
ISSUE DATE	June 2016
GEC FILE NO.	0500-44D
SHEET NO.	C5.1

G:\Current Files E-K\Forest Landscaping and Construction, Inc. 0500-44D\CAD 0500-44D\2_CIVIL\Source Drawings\Surfaces\0500-44D-FG.dwg, 6/9/2016 3:33:08 PM, 1:1

5+00.00

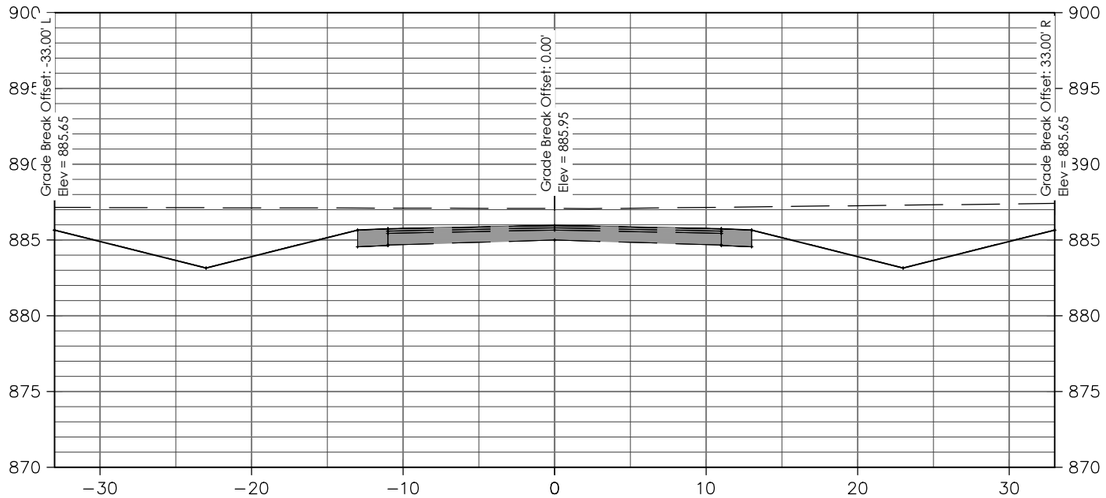

6+00.00

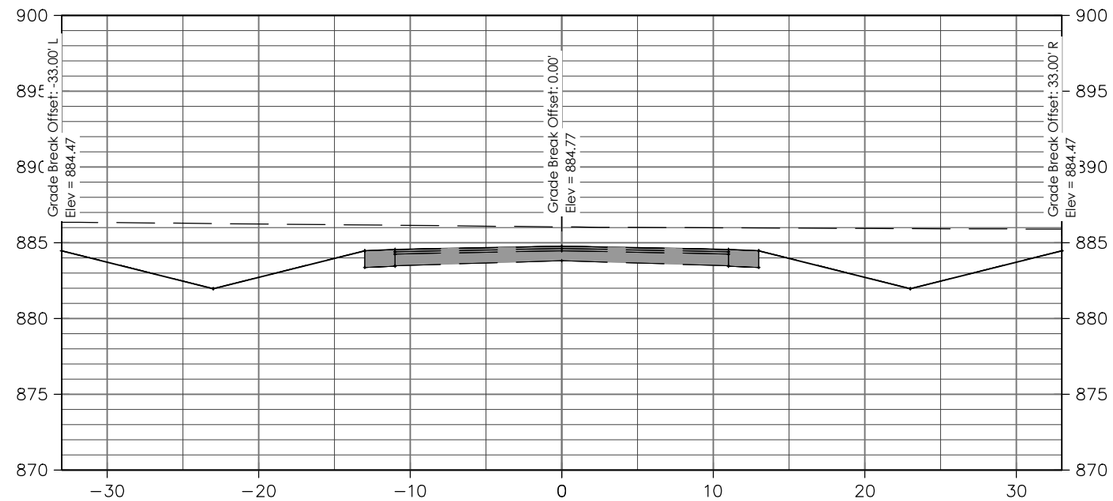

4+50.00

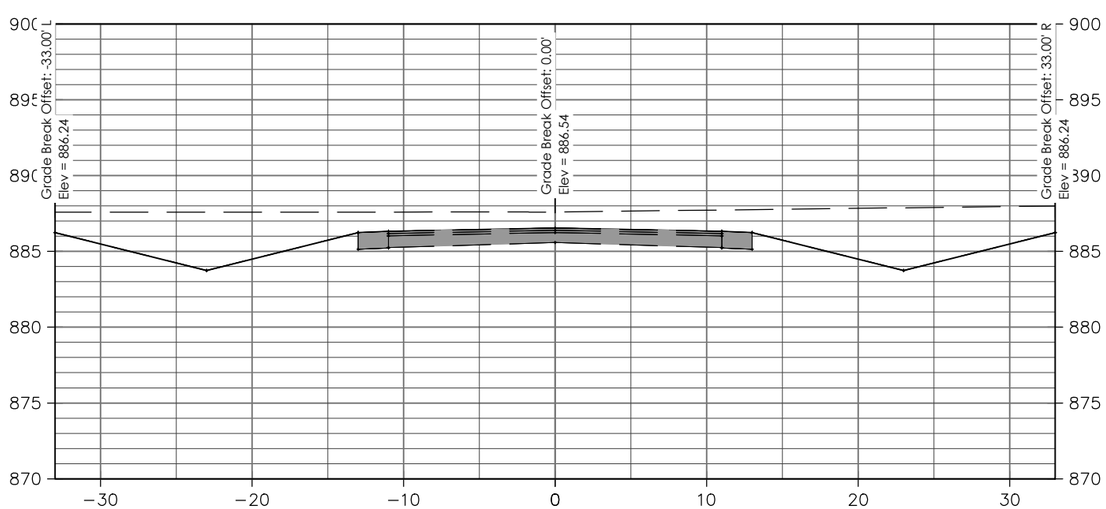

5+50.00

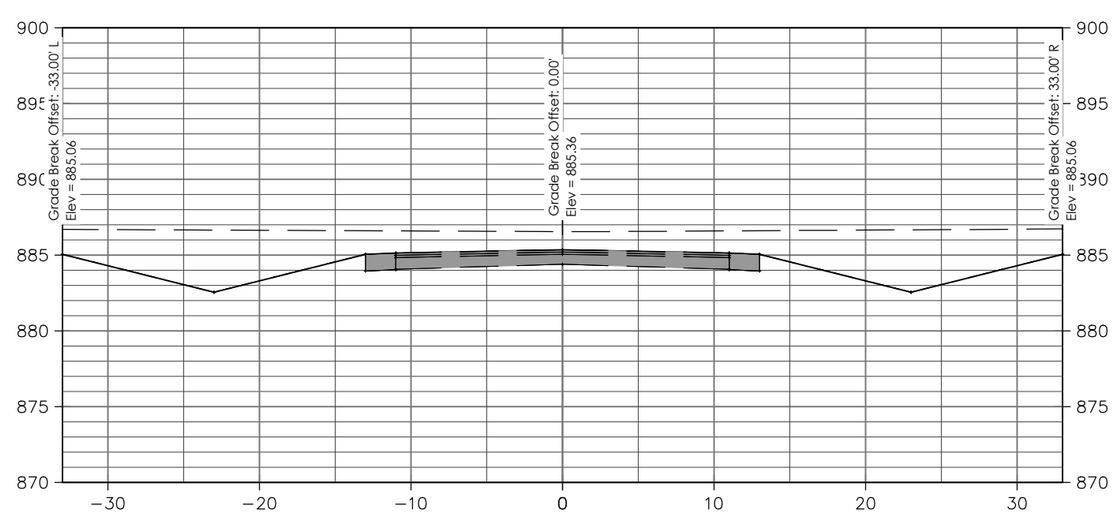

General Engineering Company

P.O. Box 340 • 916 Silver Lake Dr. • Portage, WI 53901
608-742-2169 (Office) • 608-742-2592 (Fax)
www.generalengineering.net

This document contains confidential or proprietary information of General Engineering Company. Neither this document nor the information herein is to be reproduced, distributed, used or disclosed either in whole or in part except as specifically authorized by General Engineering Company.

BRIDLE PATH CROSS SECTIONS
Shorewood Hills North -- Phase III
Street & Utility Construction

Town of Lake Mills
Jefferson County, WI

REVISIONS	NO.	BY	DATE

N
W E
S
0 10
SCALE

DRAWN BY	KCW
REVIEWED BY	KDA
ISSUE DATE	June 2016
GEC FILE NO.	0500-44D
SHEET NO.	C5.2

G:\Current Files E-K\Forest Landscaping and Construction, Inc. 0500-44D\CAD 0500-44D\2_CIVIL\Source Drawings\Surfaces\0500-44D-FG.dwg, 6/9/2016 3:33:35 PM, 1:1

7+00.00

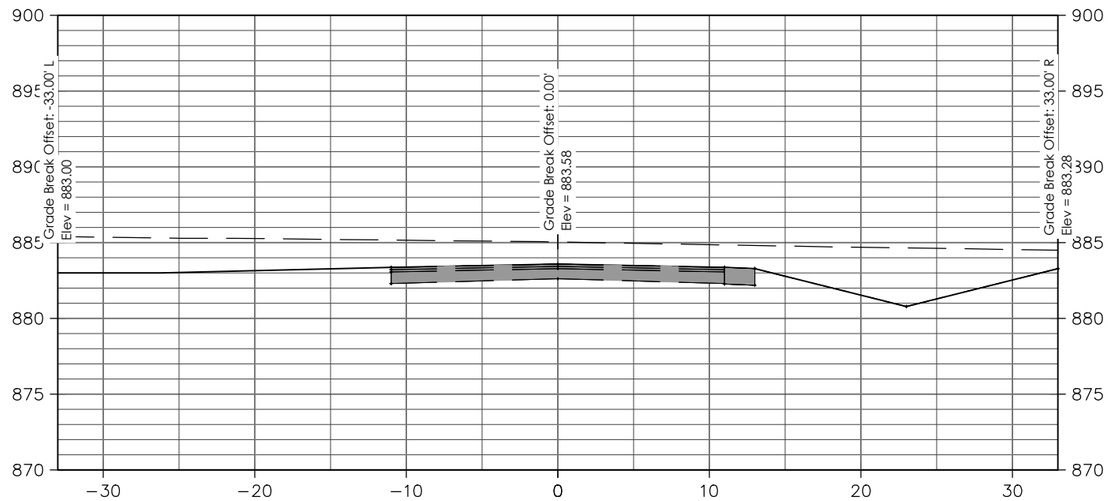

8+00.00

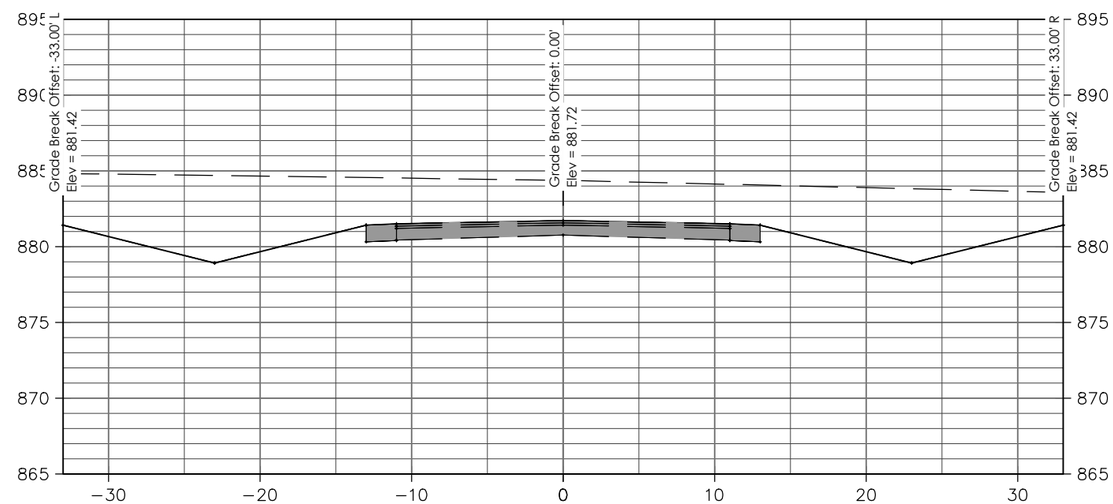

6+50.00

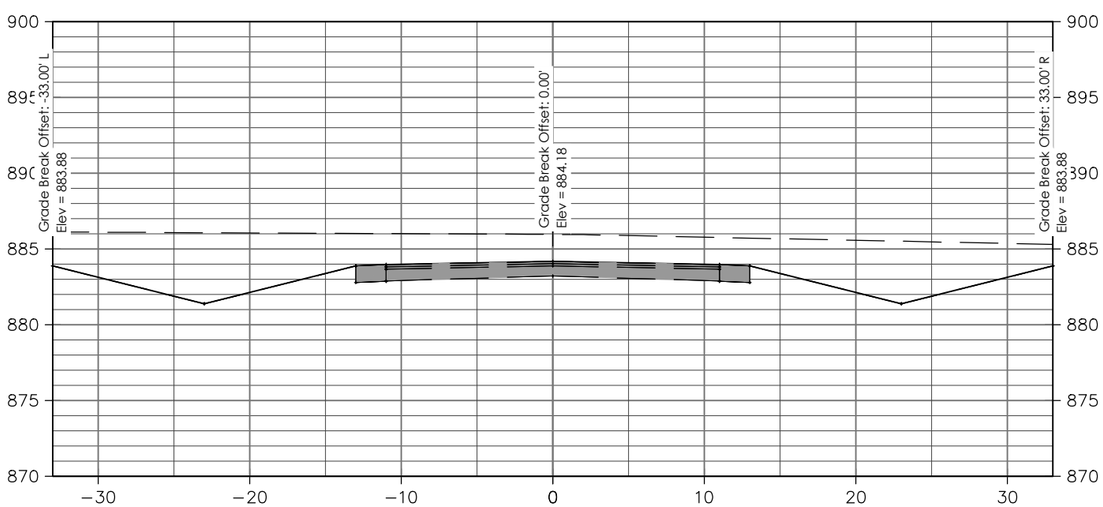

7+50.00

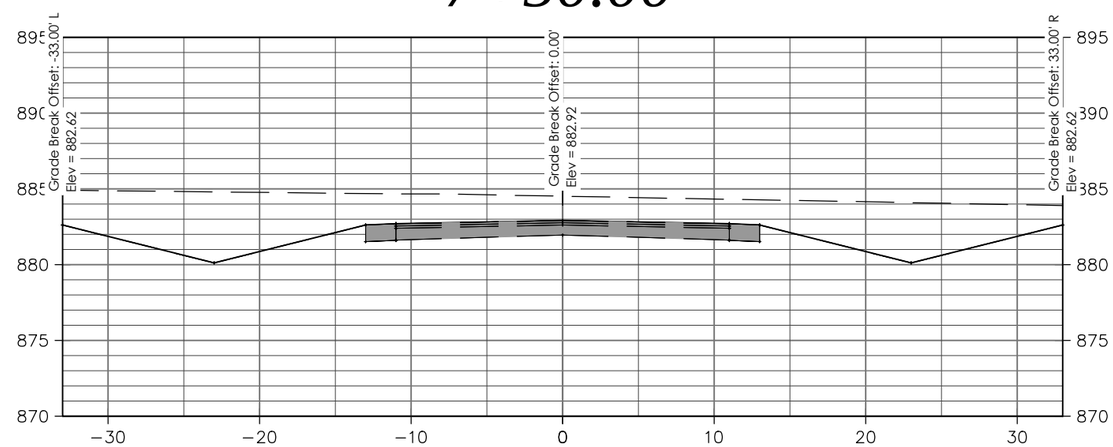

GEC

General Engineering Company

P.O. Box 340 • 916 Silver Lake Dr. • Portage, WI 53901
608-742-2169 (Office) • 608-742-2592 (Fax)
www.generalengineering.net

This documes contains confiential or proprietary information of General Engineering Company. Neither the contents nor the topic may be used for any purpose other than that for which it is designed either in whole or in part except as specifically authorized by General Engineering Company.

BRIDLE PATH CROSS SECTIONS

Shorewood Hills North -- Phase III

Street & Utility Construction

Town of Lake Mills
Jefferson County, WI

REVISIONS	NO.	BY	DATE

N
W E
S
0 10
SCALE

DRAWN BY	KCW
REVIEWED BY	KDA
ISSUE DATE	June 2016
GEC FILE NO.	0500-44D
SHEET NO.	C5.3

G:\Current Files E-K\Forest Landscaping and Construction, Inc. 0500-44D\CAD 0500-44D\2_CIVIL\Source Drawings\Surfaces\0500-44D-FG.dwg, 6/9/2016 3:33:59 PM, 1:1

9+00.00

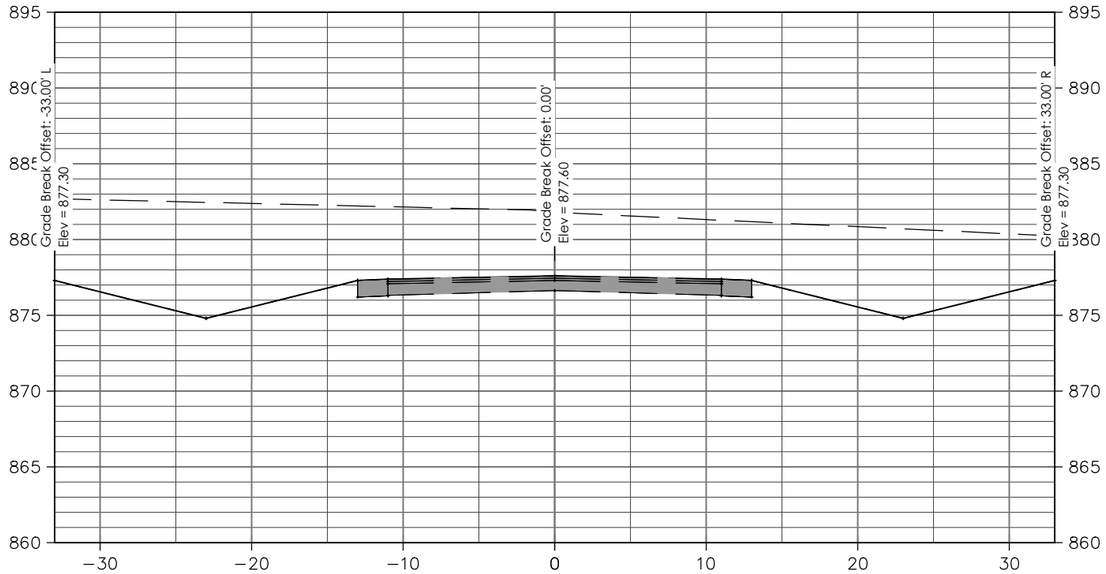

10+00.00

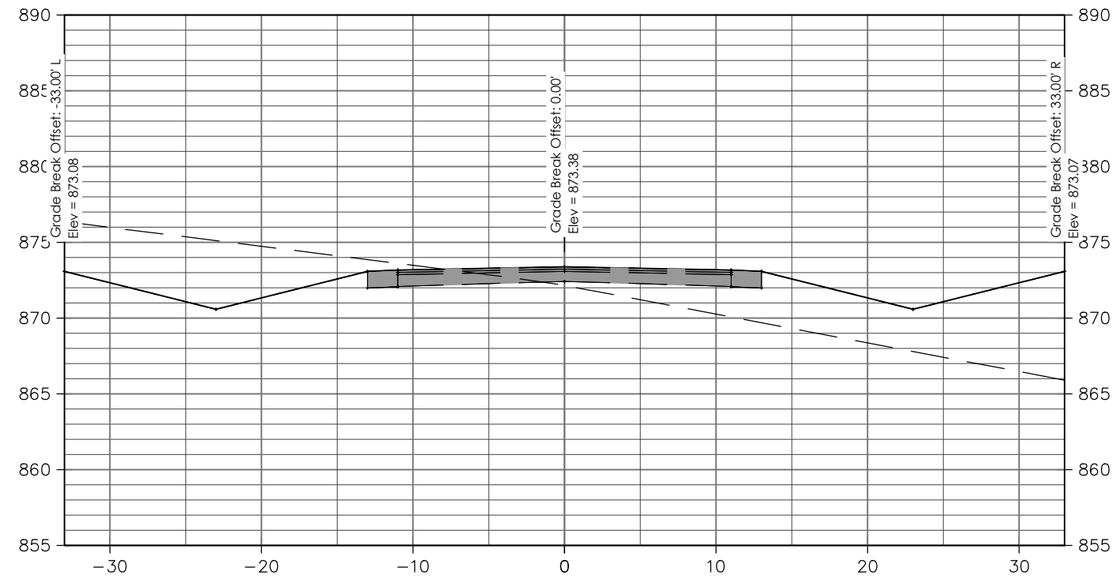

8+50.00

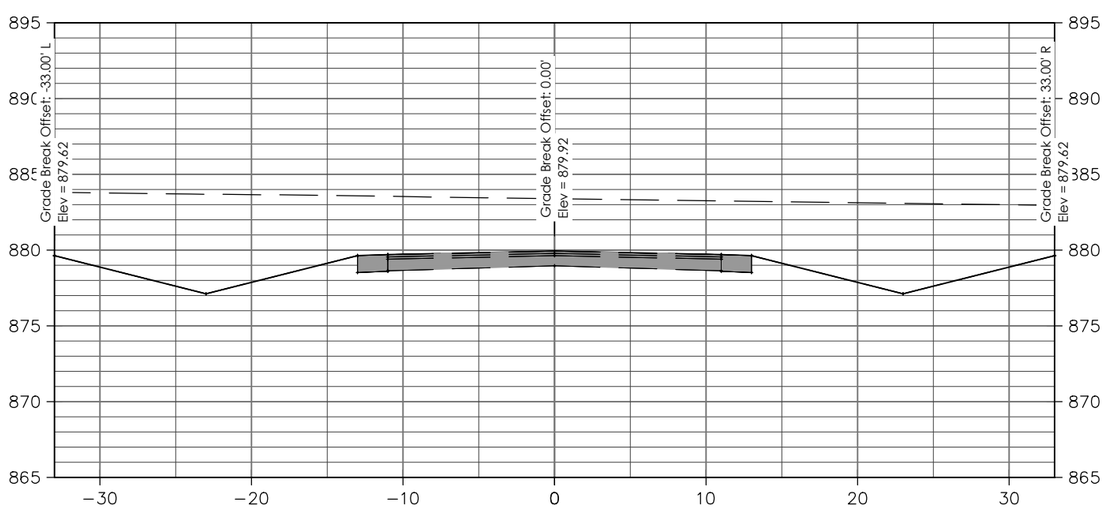

9+50.00

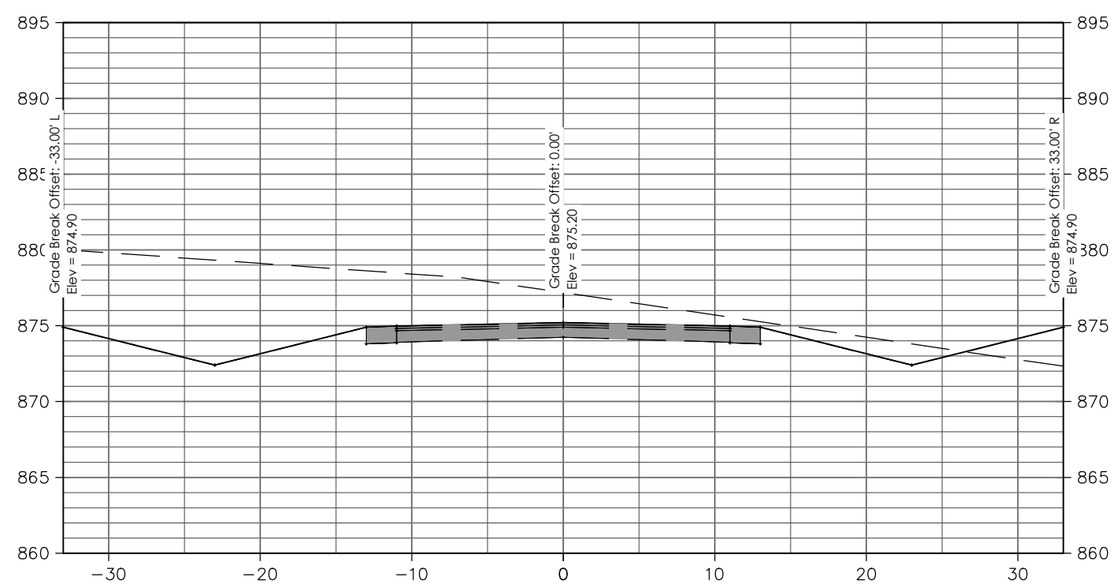

GEC

General Engineering Company

P.O. Box 340 • 916 Silver Lake Dr. • Portage, WI 53901
608-742-2169 (Office) • 608-742-2592 (Fax)
www.generalengineering.net

This document contains confidential or proprietary information of General Engineering Company. It may not be copied or distributed to any other party or used for any purpose other than that for which it is designed, either in whole or in part except as specifically authorized by General Engineering Company.

BRIDLE PATH CROSS SECTIONS

Shorewood Hills North -- Phase III
Street & Utility Construction

Town of Lake Mills
Jefferson County, WI

REVISIONS	NO.	BY	DATE

N
W E
S
0 10
SCALE

DRAWN BY	KCW
REVIEWED BY	KDA
ISSUE DATE	June 2016
GEC FILE NO.	0500-44D
SHEET NO.	C5.4

G:\Current Files E-K\Forest Landscaping and Construction, Inc. 0500-44D\CAD 0500-44D\2_CIVIL\Source Drawings\Surfaces\0500-44D-FG.dwg, 6/9/2016 3:34:19 PM, 1:1

11+00.00

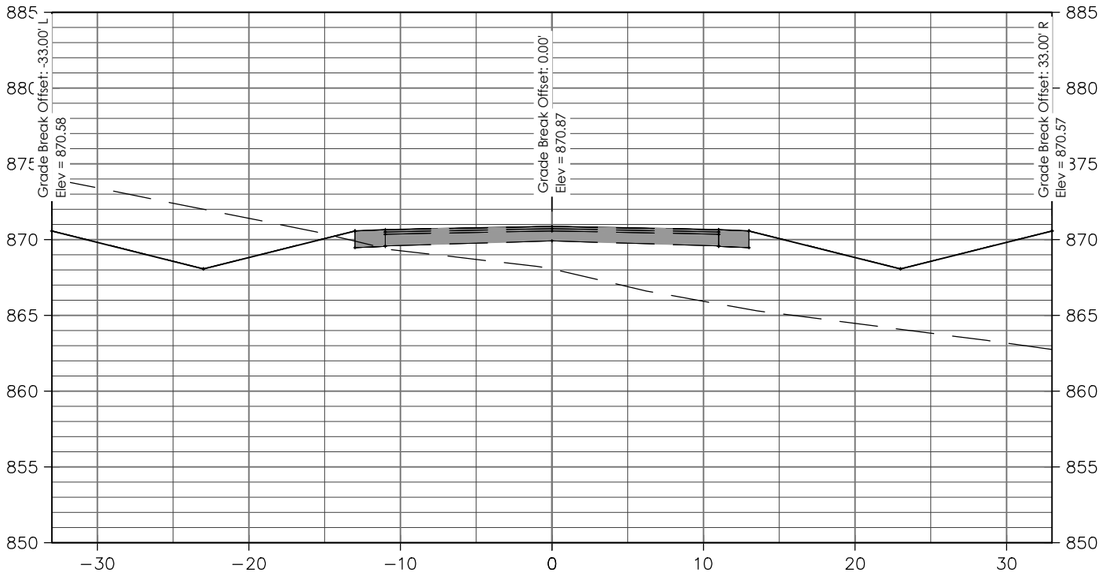

12+00.00

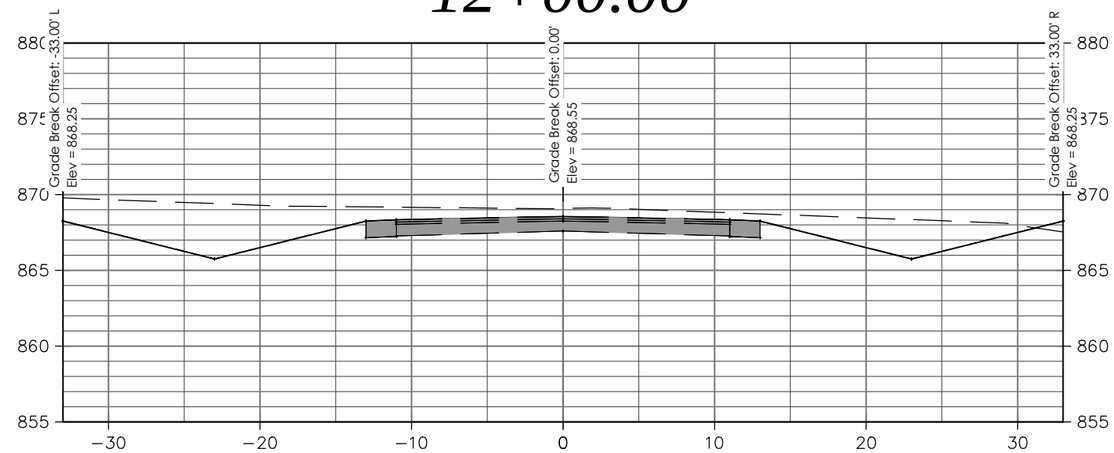

10+50.00

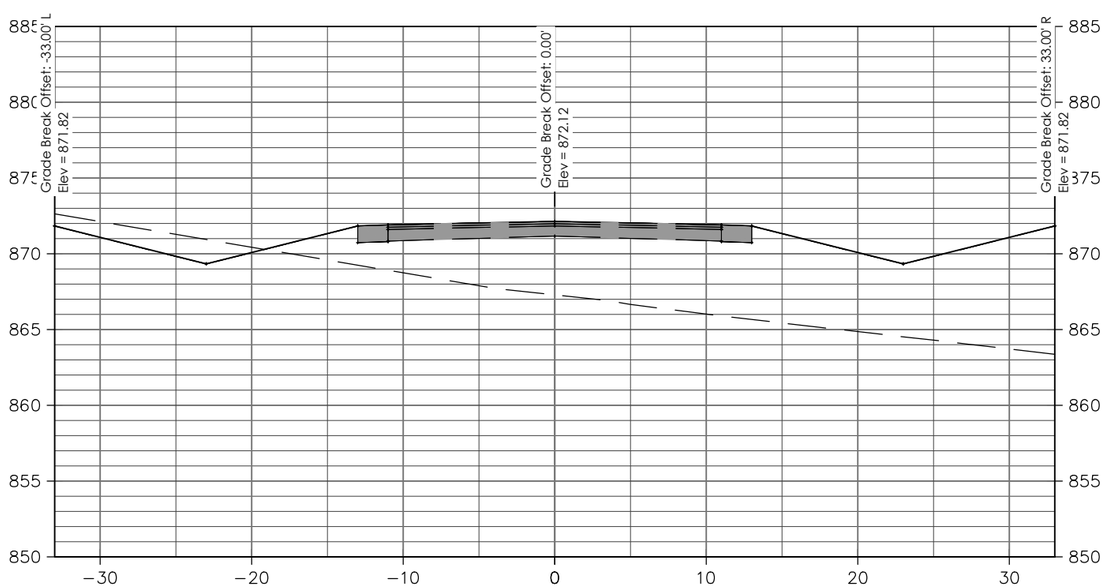

11+50.00

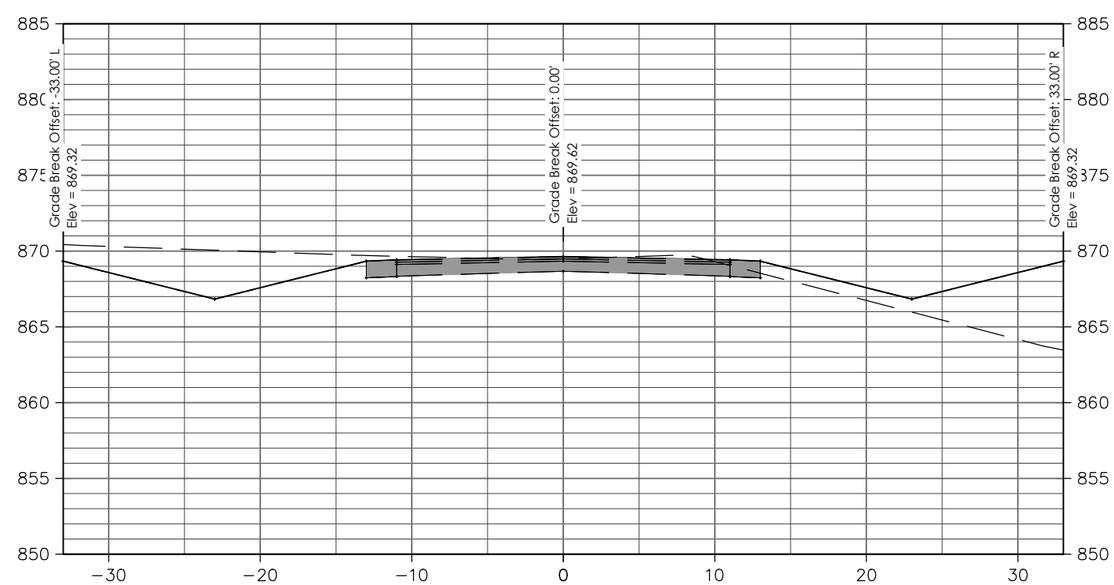

GEC

General Engineering Company

P.O. Box 340 • 916 Silver Lake Dr. • Portage, WI 53901
608-742-2169 (Office) • 608-742-2592 (Fax)
www.generalengineering.net

This documes contains confidential or proprietary information of General Engineering Company. Neither the contents nor the ideas, designs, or plans therein may be disclosed, used, or copied either in whole or in part except as specifically authorized by General Engineering Company.

BRIDLE PATH CROSS SECTIONS
Shorewood Hills North -- Phase III
Street & Utility Construction

Town of Lake Mills
Jefferson County, WI

REVISIONS	NO.	BY	DATE

N
W E
S
0 10
SCALE

DRAWN BY	KCW
REVIEWED BY	KDA
ISSUE DATE	June 2016
GEC FILE NO.	0500-44D
SHEET NO.	C5.5

G:\Current Files E-K\Forest Landscaping and Construction, Inc. 0500-44D\CAD 0500-44D\2_CIVIL\Source Drawings\Surfaces\0500-44D-FG.dwg, 6/9/2016 3:34:41 PM, 1:1

13+00.00

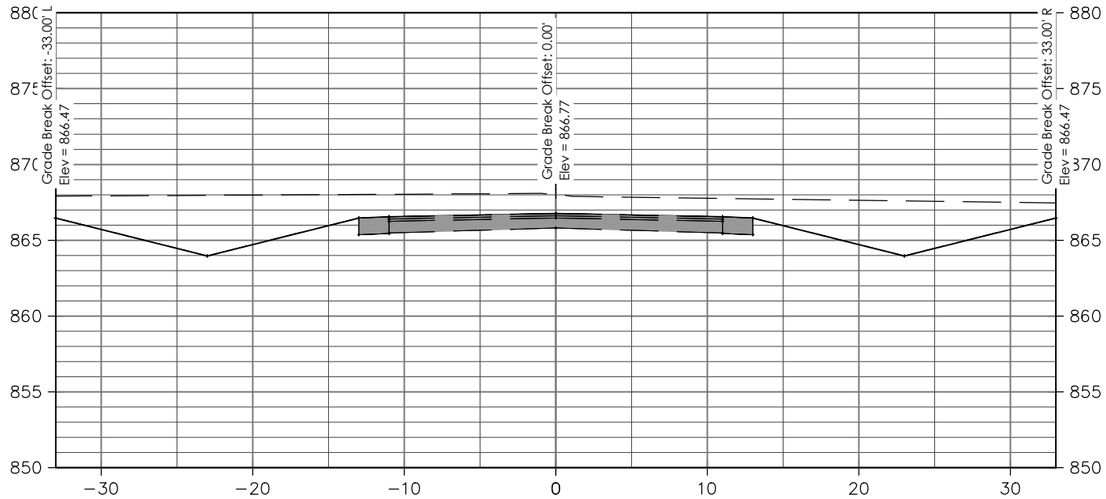

14+00.00

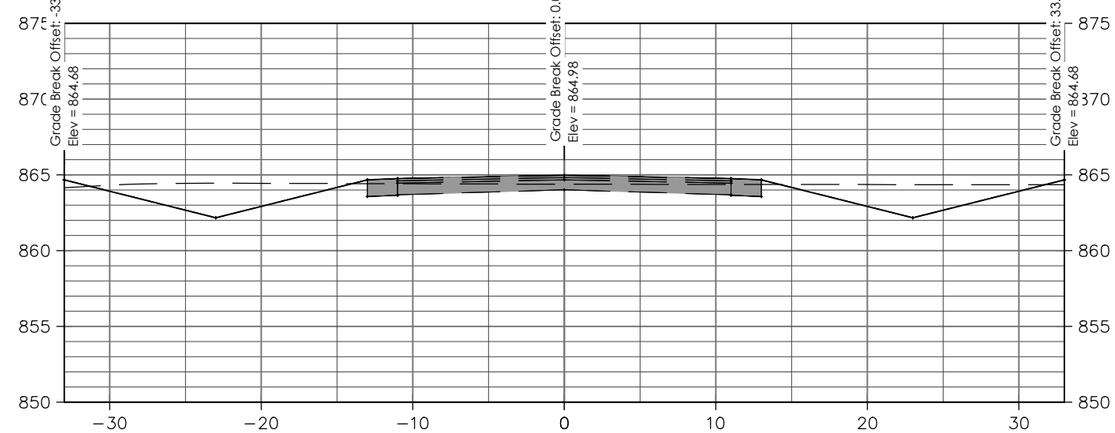

12+50.00

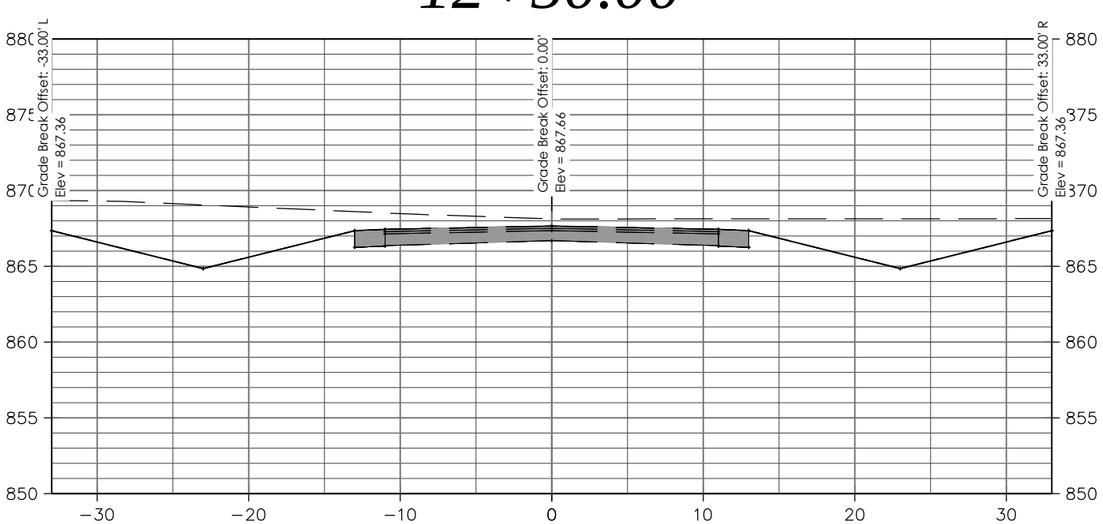

13+50.00

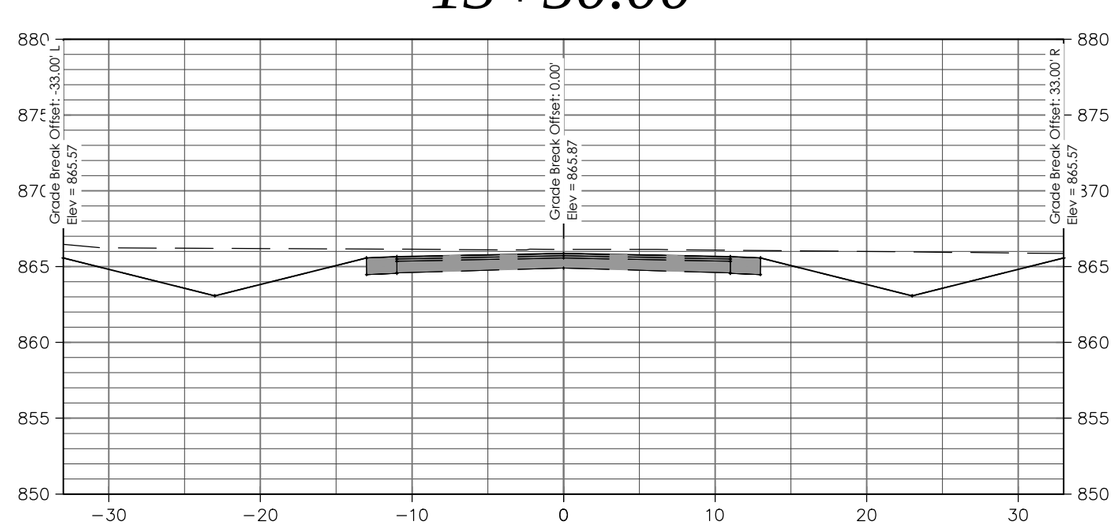

General Engineering Company

P.O. Box 340 • 916 Silver Lake Dr. • Portage, WI 53901
608-742-2169 (Office) • 608-742-2592 (Fax)
www.generalengineering.net

This document contains confidential or proprietary information of General Engineering Company. Neither this document nor the information herein is to be reproduced, distributed, used or disclosed either in whole or in part except as specifically authorized by General Engineering Company.

BRIDLE PATH CROSS SECTIONS

Shorewood Hills North -- Phase III
Street & Utility Construction

Town of Lake Mills
Jefferson County, WI

REVISIONS	NO.	BY	DATE

N
W E
S
0 10
SCALE

DRAWN BY	KCW
REVIEWED BY	KDA
ISSUE DATE	June 2016
GEC FILE NO.	0500-44D
SHEET NO.	C5.6

G:\Current Files E-K\Forest Landscaping and Construction, Inc. 0500-44D\CAD 0500-44D\2_CIVIL\Source Drawings\Surfaces\0500-44D-FG.dwg, 6/9/2016 3:35:04 PM, 1:1

14+50.00

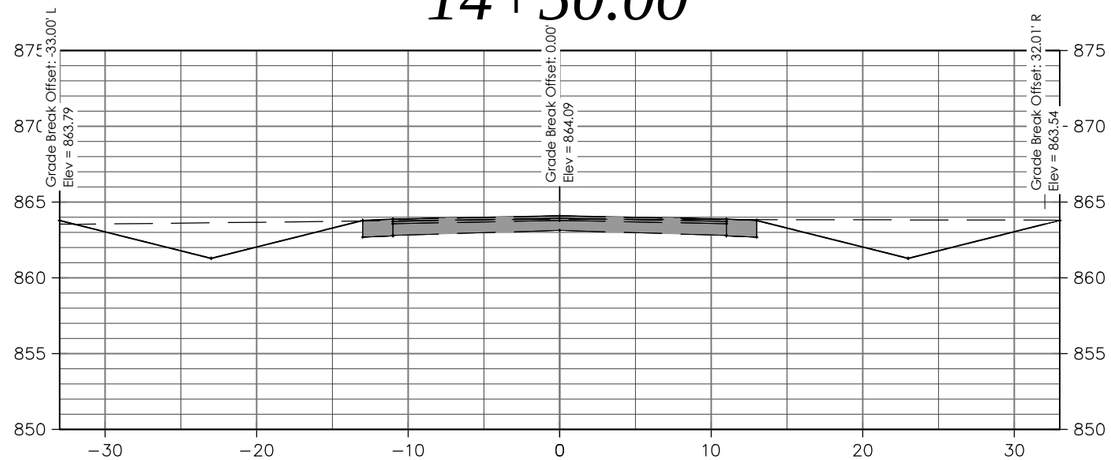

G:\Current Files E-K\Forest Landscaping and Construction, Inc. 0500-44D\CAD 0500-44D\2_CIVIL\Source Drawings\Surfaces\0500-44D-FG.dwg, 6/9/2016 3:35:28 PM,
1:1

GEC

General Engineering Company

P.O. Box 340 • 916 Silver Lake Dr. • Portage, WI 53901
608-742-2169 (Office) • 608-742-2592 (Fax)
www.generalengineering.net

This documes contains confidential or proprietary information of General Engineering Company. Neither this document nor the information herein is to be reproduced, distributed, used or disclosed either in whole or in part except as specifically authorized by General Engineering Company.

BRIDLE PATH CROSS SECTIONS
Shorewood Hills North -- Phase III
Street & Utility Construction

Town of Lake Mills
Jefferson County, WI

REVISIONS	NO.	BY	DATE

N
W E
S
0 10
SCALE

DRAWN BY	KCW
REVIEWED BY	KDA
ISSUE DATE	June 2016
GEC FILE NO.	0500-44D
SHEET NO.	C5.7

72+50.00

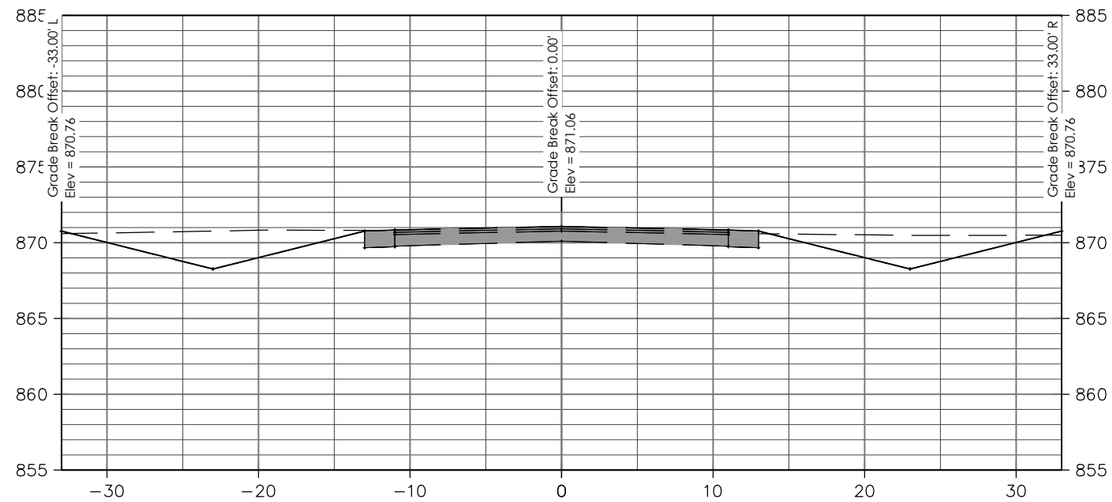

73+50.00

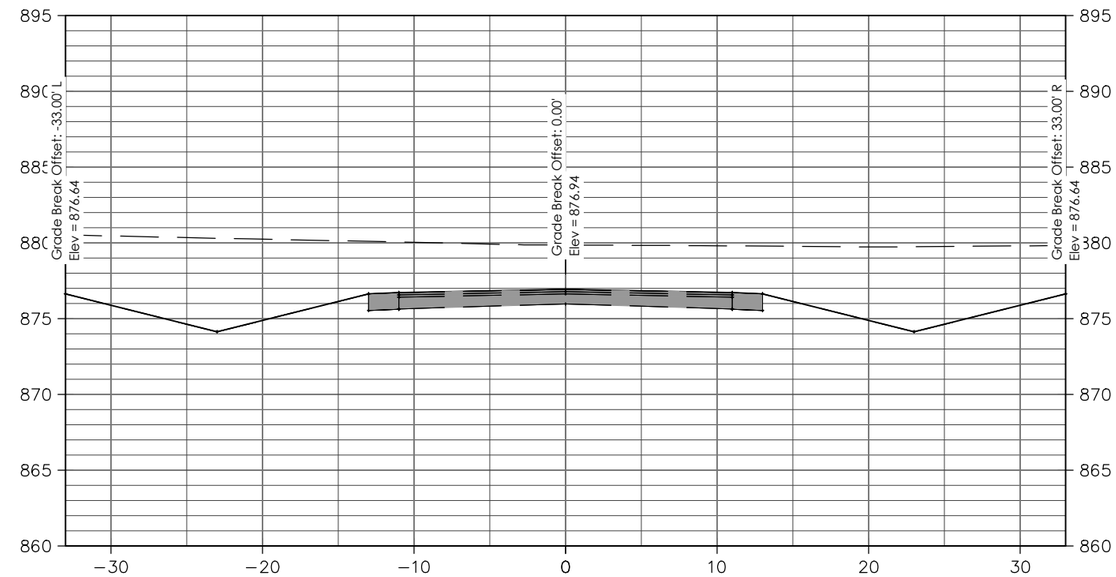

72+00.00

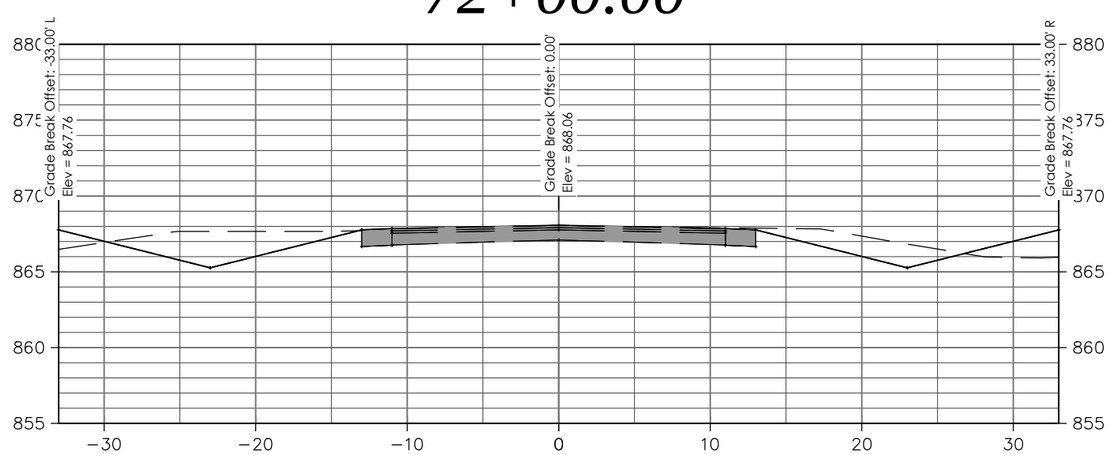

73+00.00

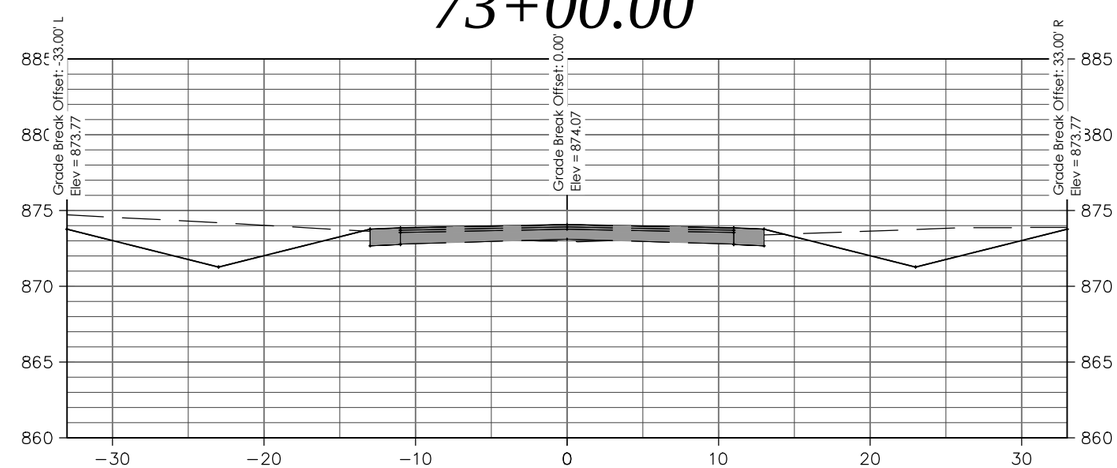

General Engineering Company

P.O. Box 340 • 916 Silver Lake Dr. • Portage, WI 53901
608-742-2169 (Office) • 608-742-2592 (Fax)
www.generalengineering.net

This document contains confidential or proprietary information of General Engineering Company. Neither this document nor the information herein is to be reproduced, distributed, used or disclosed either in whole or in part except as specifically authorized by General Engineering Company.

SADDLE LANE CROSS SECTIONS

Shorewood Hills North -- Phase III
Street & Utility Construction

Town of Lake Mills
Jefferson County, WI

REVISIONS	NO.	BY	DATE

N
W E
S
0 10
SCALE

DRAWN BY	KCW
REVIEWED BY	KDA
ISSUE DATE	June 2016
GEC FILE NO.	0500-44D
SHEET NO.	C6.0

G:\Current Files E-K\Forest Landscaping and Construction, Inc. 0500-44D\CAD 0500-44D\2_CIVIL\Source Drawings\Surfaces\0500-44D-FG.dwg, 6/9/2016 3:35:55 PM, 1:1

74+50.00

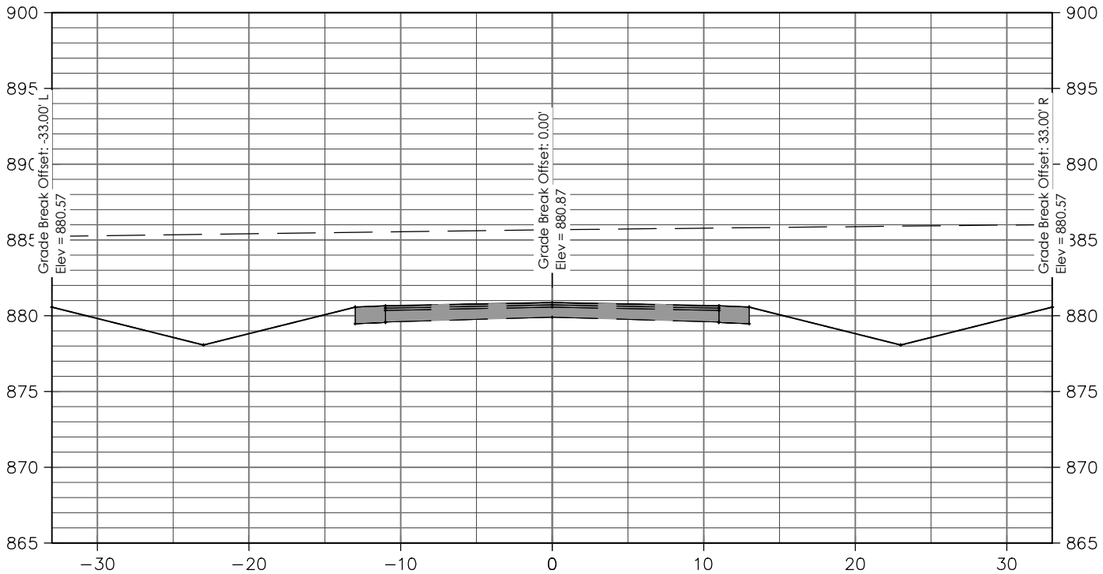

75+50.00

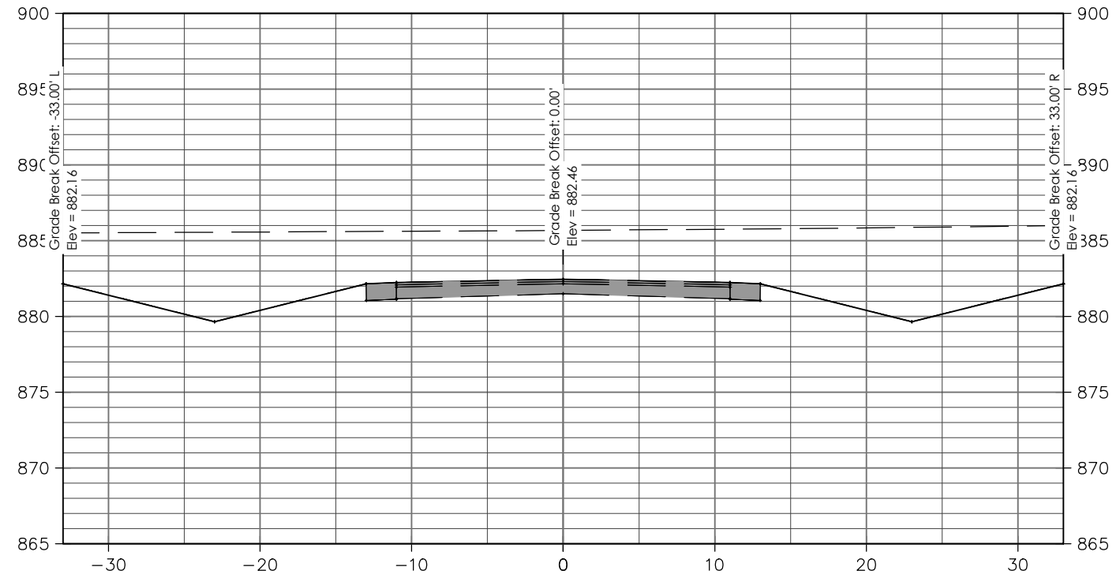

74+00.00

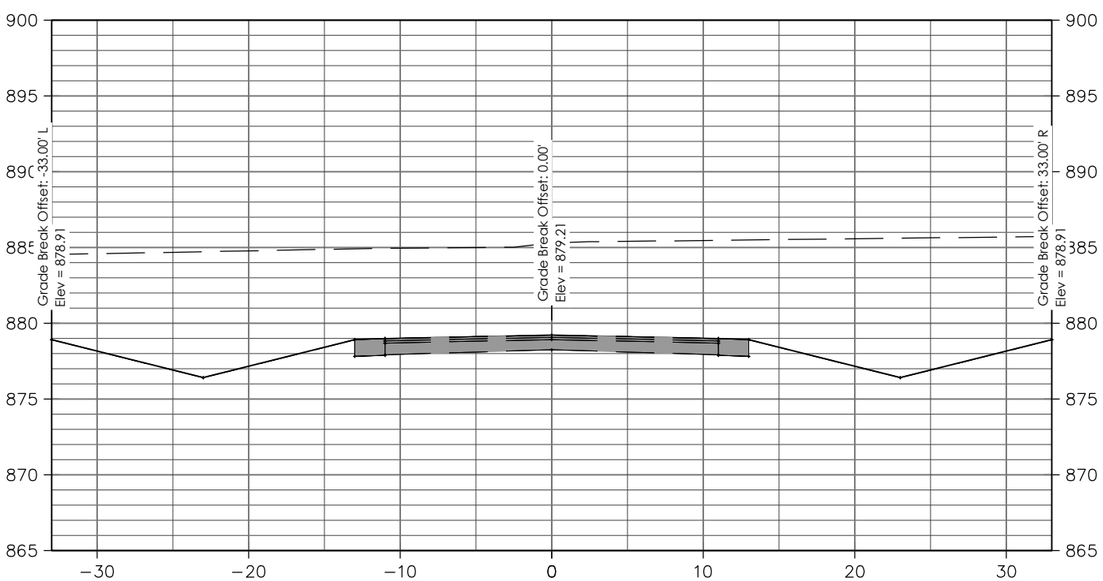

75+00.00

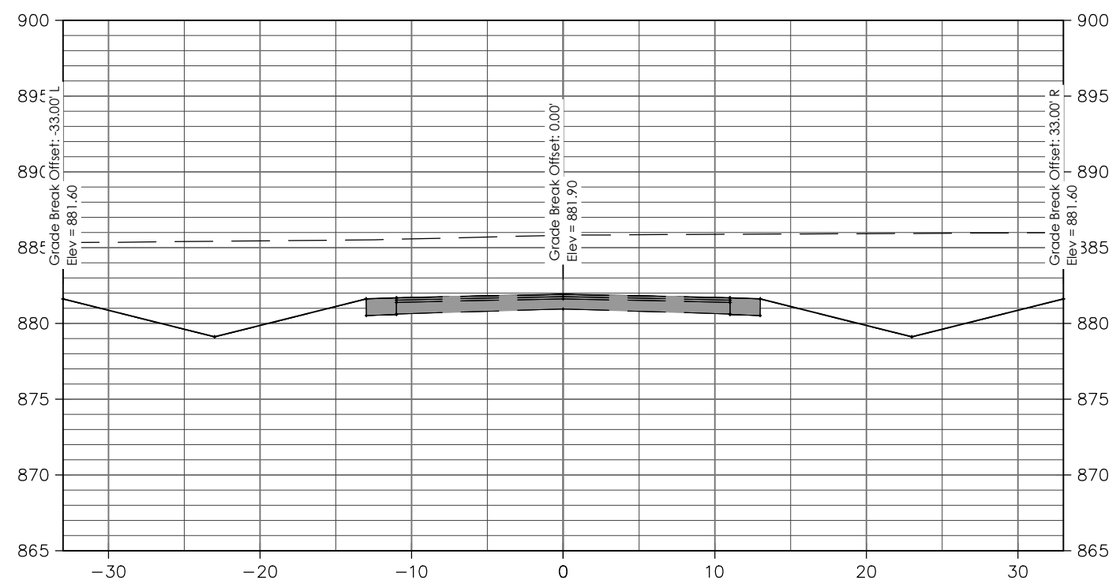

General Engineering Company

P.O. Box 340 • 916 Silver Lake Dr. • Portage, WI 53901
608-742-2169 (Office) • 608-742-2592 (Fax)
www.generalengineering.net

This document contains confidential or proprietary information of General Engineering Company. Neither this document nor the information herein is to be reproduced, distributed, used or disclosed either in whole or in part except as specifically authorized by General Engineering Company.

SADDLE LANE CROSS SECTIONS
Shorewood Hills North -- Phase III
Street & Utility Construction

Town of Lake Mills
Jefferson County, WI

REVISIONS	NO.	BY	DATE

N
W E
S
0 10
SCALE

DRAWN BY	KCW
REVIEWED BY	KDA
ISSUE DATE	June 2016
GEC FILE NO.	0500-44D
SHEET NO.	C6.1

G:\Current Files E-K\Forest Landscaping and Construction, Inc. 0500-44D\CAD 0500-44D\2_CIVIL\Source Drawings\Surfaces\0500-44D-FG.dwg, 6/9/2016 3:36:34 PM, 1:1

PRELIMINARY NOT FOR CONSTRUCTION

NOTES:

1.) USE OF RISERS GOVERNED BY BASEMENT DEPTH & LOCAL CONDITIONS OR AS DIRECTED BY ENGINEER
2.) LATERAL SHALL END AT PROPERTY LINE UNLESS OTHERWISE DIRECTED BY ENGINEER
3.) DEPTH TO LATERAL & PROPERTY LINE SHALL NOT BE DEEPER THAN NECESSARY TO SERVICE PARCEL
4.) ALL LATERALS TO BE 4" UNLESS OTHERWISE NOTED ON PLANS OR IN SPECIFICATIONS
5.) ALL HOUSE LATERAL CONNECTIONS SHALL BE CONSTRUCTED AS PER THIS DETAIL UNLESS OTHERWISE SHOWN ON PLANS, OR WITH WRITTEN APPROVAL OF THE ENGINEER

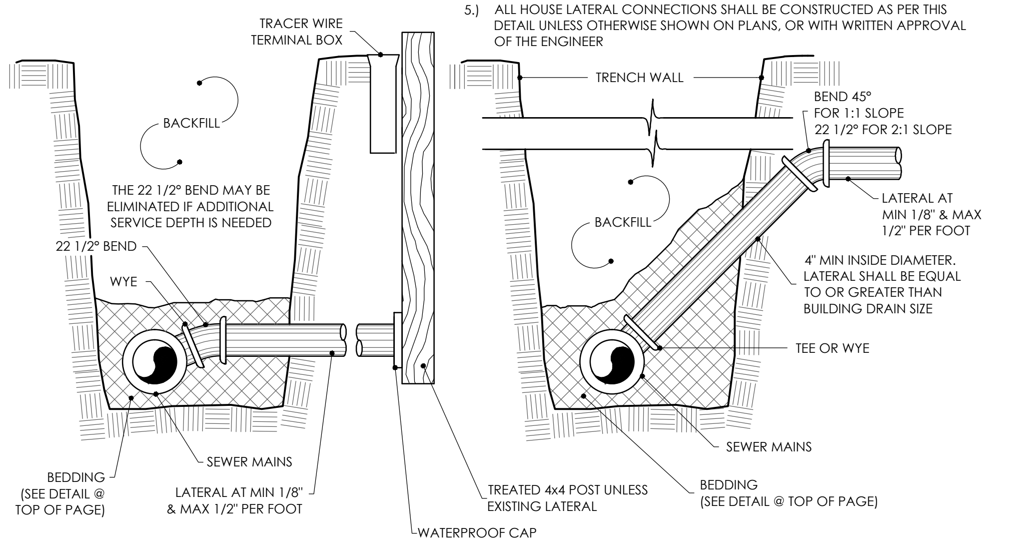

TYPICAL LATERAL CONNECTIONS

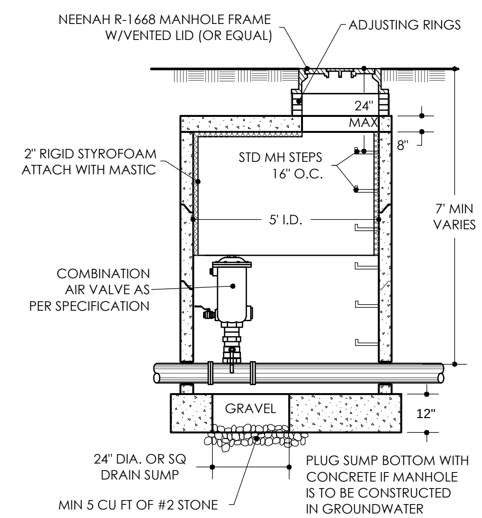

SECTION A-A

STANDARD VENT MH

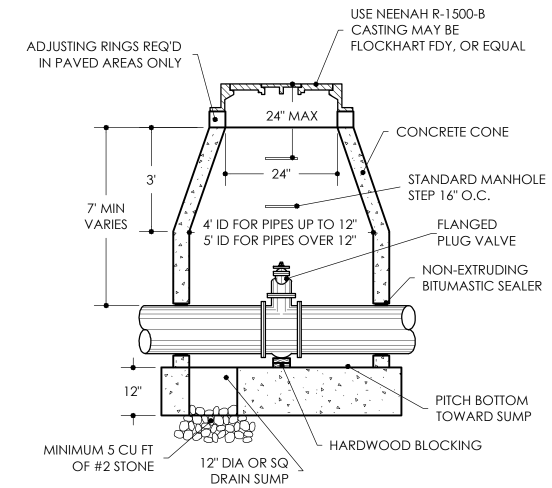

SECTION B-B

STANDARD VALVE MH

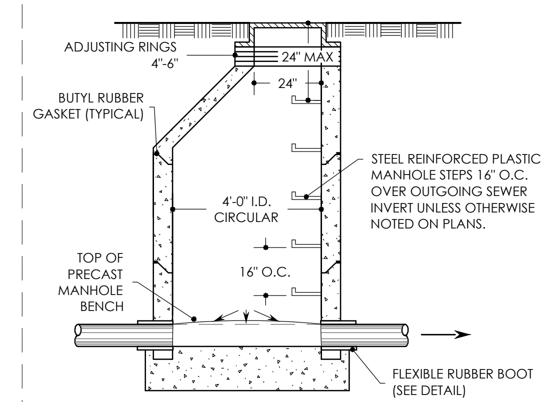

STANDARD PRECAST MH

TYPICAL MANHOLES

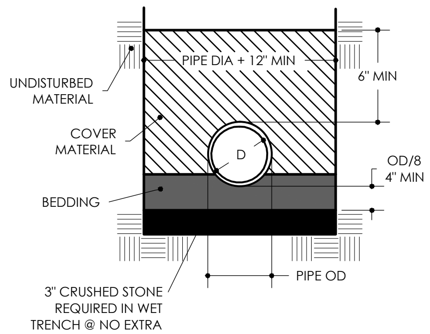

BEDDING AND COVER MATERIAL:
CLASS B: CRUSHED STONE OR GRAVEL CONFORMING TO FOLLOWING GRADATION:

SIEVE SIZE	% PASSING BY WEIGHT
1"	100
3/4"	90-100
3/8"	20-55
NO. 4	0-10
NO. 8	0-5

CLASS C: EXCAVATED COARSE-GRAINED SOILS, TYPES GW, GP, SW, SP GM, GC, SM, AND SC; CLASS B BEDDING; OR PIT RUN SAND.

INSTALLATION:
PLACE AND COMPACT BEDDING AND COVER IN MAXIMUM 6" LAYERS. WORK MATERIAL IN AND AROUND PIPE BY HAND TO PROVIDE UNIFORM SUPPORT.

RIGID PIPE

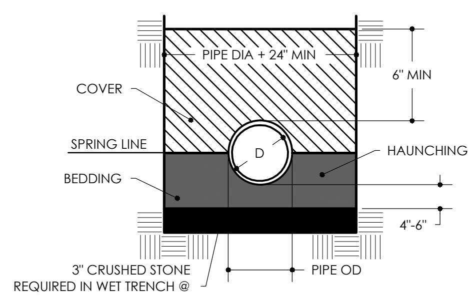

BEDDING AND COVER MATERIAL:
CLASS IA: CRUSHED STONE OR GRAVEL CONFORMING TO FOLLOWING GRADATION:

SIEVE SIZE	% PASSING BY WEIGHT
1"	100
3/4"	90-100
3/8"	20-55
NO. 4	0-10
NO. 8	0-5

CLASS IB: CRUSHED STONE OR GRAVEL CONFORMING TO FOLLOWING GRADATION:

SIEVE SIZE	% PASSING BY WEIGHT
1/2"	100
3/8"	85-100
NO. 4	10-30
NO. 8	0-5

CLASS II: SAND, GRAVELS, AND SAND-GRAVEL MIXTURES WITH LITTLE OR NO FINES. SOIL TYPES GW, GP, SW, AND SP.
CLASS III: SANDS, GRAVELS, AND SAND-GRAVEL MIXTURES WITH FINES. SOIL TYPES GM, GC, SM, AND SC.

INSTALLATION:
PLACE AND COMPACT BEDDING AND COVER IN MAXIMUM 6" LAYERS. WORK MATERIAL IN AND AROUND PIPE BY HAND TO PROVIDE UNIFORM SUPPORT. COMPACT CLASS IB WITH HAND TAMPER OR VIBRATORY COMPACTOR TO 85% STANDARD PROCTOR, COMPACT CLASS II WITH VIBRATORY COMPACTOR TO 85% STANDARD PROCTOR, COMPACT CLASS III WITH VIBRATORY COMPACTOR TO 90% STANDARD PROCTOR.

FLEXIBLE (PVC) PIPE

TYPICAL PIPE BEDDING

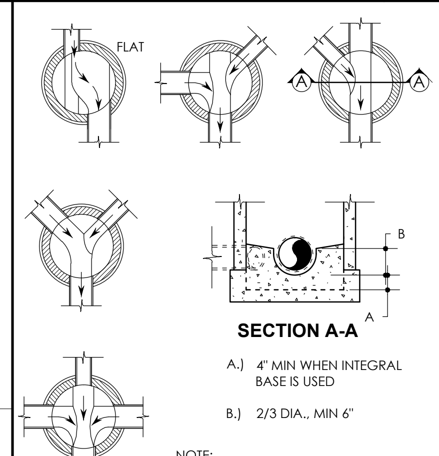

A.) 4" MIN WHEN INTEGRAL BASE IS USED
B.) 2/3 DIA., MIN 6"

NOTE:
BENCH SLOPE: MINIMUM OF 2" PER FOOT

TYPICAL MANHOLE INVERTS

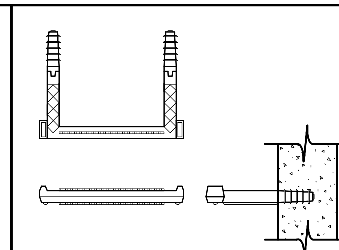

NOTES:
1. MINIMUM DESIGN LIVE LOAD SHALL BE A SINGLE CONCENTRATED LOAD OF 300 LBS. VERTICALLY AND 200 LBS. PULL OUT.
2. STEPS MUST BE EQUALLY SPACED VERTICALLY IN THE ASSEMBLED MANHOLE AT A MAXIMUM DESIGN DISTANCE OF 16" APART.
3. STEPS SHALL BE FABRICATED OF COPOLYMER POLYPROPYLENE THAT ENCAPSULATES A DEFORMED 1/2" GRADE 60 REINFORCING ROD.

TYPICAL STEP DETAIL

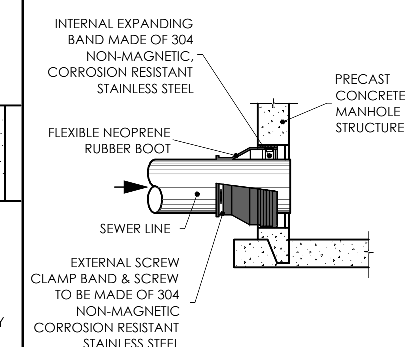

FLEX PIPE TO MH

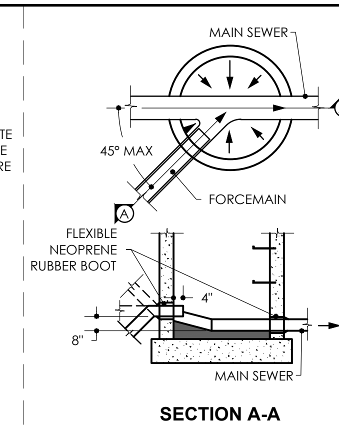

FORCEMAIN TO MH

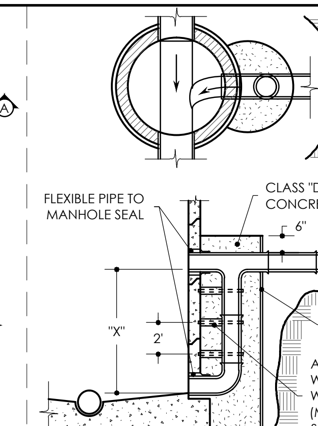

NOTES:
1. F.L. OF DROP TO BE SET AT SAME ELEVATION AS SPRING LINE OF MAIN.
2. PIPE DROP TO BE SAME DIA AS INCOMING SEWER INCLUDING 24" DIA (SPECIAL DESIGN FOR GREATER THAN 24" DIA.)

OUTSIDE DROP TO MH

TYPICAL MANHOLE CONNECTIONS

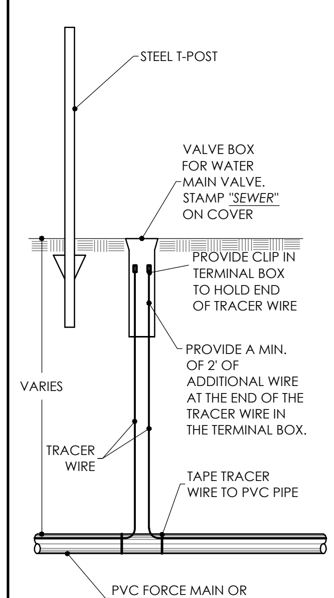

TRACER WIRE TERMINAL BOX

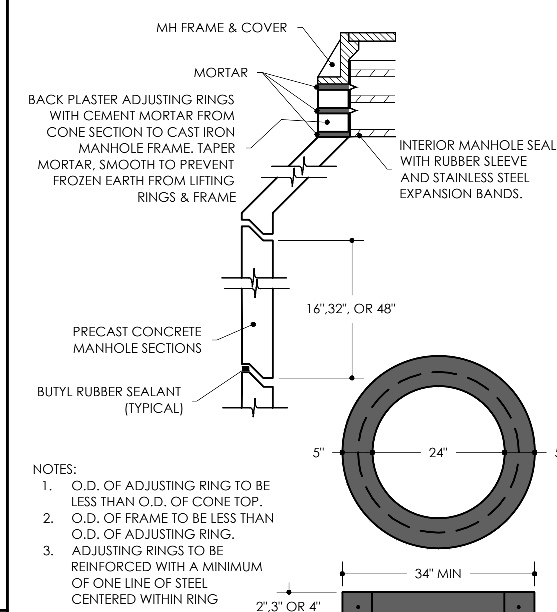

NOTES:
1. O.D. OF ADJUSTING RING TO BE LESS THAN O.D. OF CONE TOP.
2. O.D. OF FRAME TO BE LESS THAN O.D. OF ADJUSTING RING.
3. ADJUSTING RINGS TO BE REINFORCED WITH A MINIMUM OF ONE LINE OF STEEL CENTERED WITHIN RING

FRAME AND JOINT SEALING DETAIL

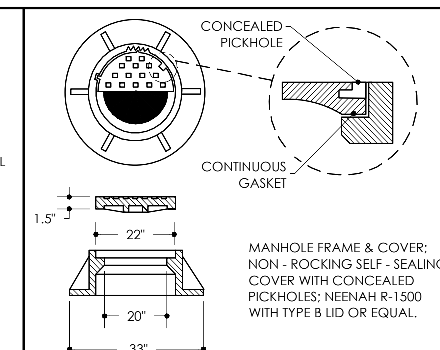

MANHOLE FRAME & COVER; NON - ROCKING SELF - SEALING COVER WITH CONCEALED PICKHOLES; NEENAH R-1500 WITH TYPE B LID OR EQUAL.

TYPICAL FRAME & COVER

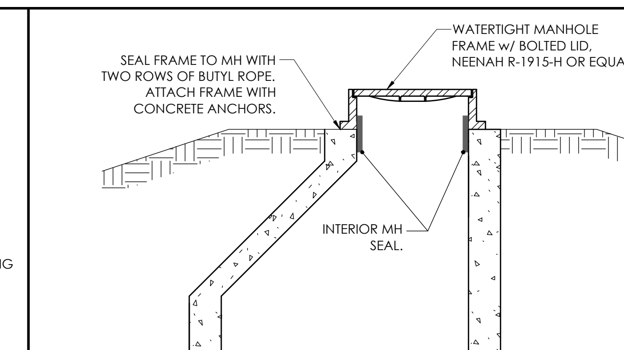

WATERTIGHT MANHOLE DETAIL

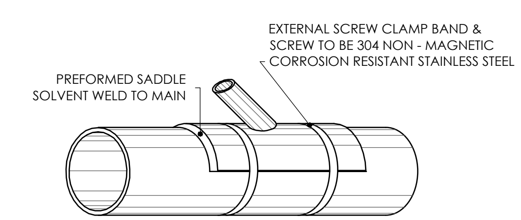

SADDLE INSTALLATION:
1.) MARK OUTLINE OF HOLE ON PIPE WITH TEMPLATE
2.) USE KEYHOLE OR SLOW SPEED SABER SAW TO CUT HOLE, DO NOT START HOLE WITH A HAMMER !
3.) APPLY PRIMER & CEMENT LIBERALLY TO CLEAN DRY SURFACE OF PIPE & UNDERSIDE OF SADDLE
4.) IMMEDIATELY PLACE SADDLE ON PIPE & PROCEED TO TIGHTEN THE TWO STAINLESS STEEL BANDS AROUND PIPE

STANDARD PIPE SADDLE FOR WYE SERVICE CONNECTION TO SEWER

GEC
General Engineering Company
P.O. Box 340 • 916 Silver Lake Dr. • Portage, WI 53901
608-742-2169 (Office) • 608-742-2592 (Fax)
www.generalengineering.net

This document contains confidential or proprietary information of General Engineering Company. Neither this document nor the information herein is to be reproduced, distributed, used or disclosed either in whole or in part except as specifically authorized by General Engineering Company.

SANITARY SEWER CONSTRUCTION DETAILS

Shorewood Hills North -- Phase III
Street & Utility Construction

Town of Lake Mills
Jefferson County, WI

DATE	BY	NO.	REVISIONS

AS NOTED
SCALE

DRAWN BY SRR
DATE June 2016
GEC FILE NO. 0500-44D
SHEET NO.
C7.0

G:\Current Files E-K\Forest Landscaping and Construction, Inc. 0500-44D\CAD 0500-44D\2_CIVIL\Production Drawings\2_Const. Plan Sets\JUNE 2016\1-C7.0-SDT-055-44D.dwg, 6/13/2016 10:10:23 AM, 1:1

PRELIMINARY NOT FOR CONSTRUCTION

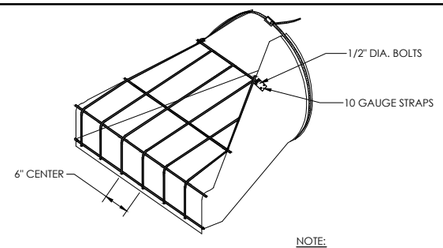

NOTE:

1. HDPE OR PVC PIPE SHALL UTILIZE CMP ENDWALLS.

TYPICAL END-SECTION GRATE

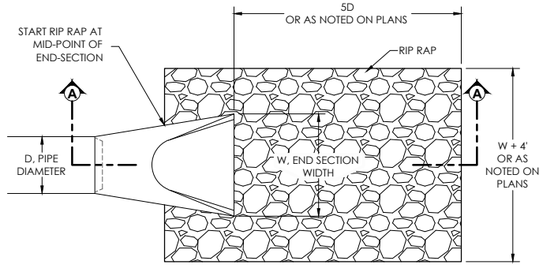

PLAN VIEW

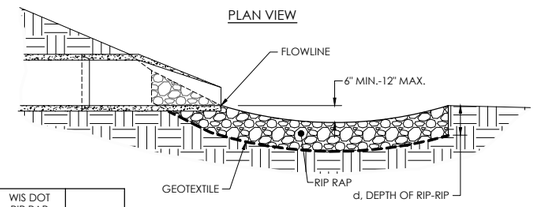

SECTION A-A

RIP RAP CLASS	WIS DOT RIP RAP EQUIVALENT	d, DEPTH
1	--	9"
2	LIGHT	18"
3	HEAVY	27"
4	EXTRA HEAVY	36"

RCP PIPE

RIP RAP AT PIPE DISCHARGE

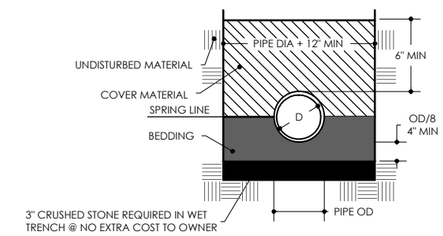

BEDDING AND COVER MATERIAL:

CLASS IA: CLEAN, ANGULAR CRUSHED STONE, CRUSHED ROCK, OR CRUSHED GRAVEL CONFORMING TO THE FOLLOWING GRADATION:

SIEVE SIZE	% PASSING BY WEIGHT
1"	100
3/4"	90-100
3/8"	20-55
NO. 4	0-10
NO. 8	0-5

CLASS IB: CLEAN, ANGULAR CRUSHED STONE, CRUSHED ROCK, OR CRUSHED GRAVEL CONFORMING TO THE FOLLOWING GRADATION:

SIEVE SIZE	% PASSING BY WEIGHT
1/2"	100
3/8"	85-100
NO. 4	10-30
NO. 200	0-5

CLASS II: CLEAN COARSE-GRAINED SOILS CLASSIFIED IN ASTM D2487 AS GW, GP, SW, SP.
CLASS III: COARSE-GRAINED SOILS WITH FINES CLASSIFIED IN ASTM D2487 AS GM, GC, SM, SC.

INSTALLATION:
PLACE 4" OF BEDDING MATERIAL BENEATH PIPE. PLACE BEDDING MATERIAL AROUND THE PIPE TO THE SPRING LINE. WORK THE MATERIAL IN AND AROUND THE PIPE BY HAND TO PROVIDE UNIFORM SUPPORT. PLACE COVER MATERIAL CAREFULLY TO A LEVEL 6" ABOVE THE PIPE.

RIGID PIPE BEDDING (RCP)

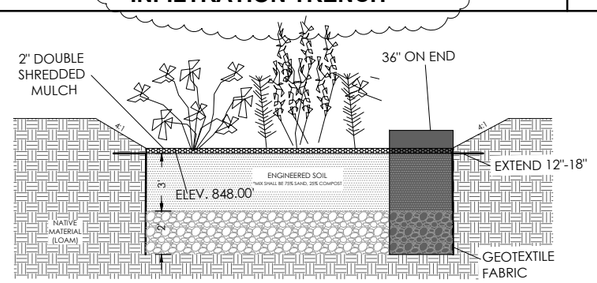

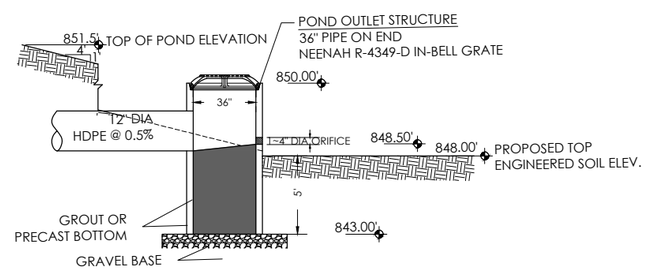

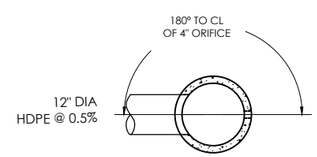

BIOFILTRATION BASIN NOTES:

1. RUNOFF SHALL NOT BE ALLOWED IN THE BASIN UNTIL AFTER THE TRIBUTARY AREA IS STABILIZED.
2. CONSTRUCTION OF THE BASIN SHOULD ONLY OCCUR DURING SUITABLE SITE CONDITIONS - IF CONSTRUCTION OF THE BASIN OCCURS DURING SATURATED SOIL CONDITIONS, THE SOIL IN THE DEVICE COULD BE UNNECESSARILY COMPACTED.
3. COMPACTION OF THE SOILS USED FOR THE BIORETENTION DEVICE MUST BE AVOIDED - HEAVY EQUIPMENT SHOULD NOT BE USED IN THE CONSTRUCTION OF THE BASIN.
4. THE ENGINEERED SOIL SHALL BE PREMIXED PRIOR TO PLACEMENT AND DRY ENOUGH TO PREVENT CLUMPING AND COMPACTION.
5. THE BASIN SHALL BE MULCHED BEFORE THE PLANTING OF THE VEGETATION IN ORDER TO PREVENT COMPACTION.
6. THE MATERIALS USED FOR THE ENGINEERED SOIL SHALL COMPLY WITH WISCONSIN DNR TECHNICAL STANDARD 1004.
7. LIVE PLANT PLUGS GROWN TO AT LEAST 1.25" x 1.25" x 2.25" IN POTS SHALL BE PLANTED AT 1' ON CENTER THROUGHOUT THE PLANTING AREA.
8. PLANTS SHALL BE NATIVE PLANTS AS SPECIFIED BY AGRECOL OR OTHER APPROVED NURSERY.

WEST BIORETENTION DEVICE

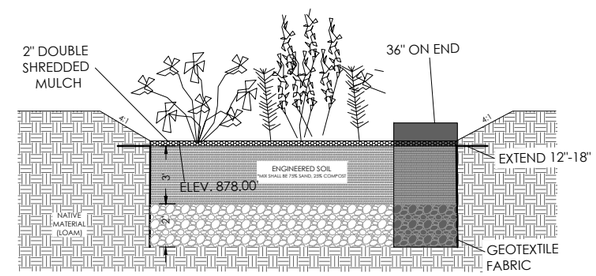

SEE BASIN NOTES TO LEFT

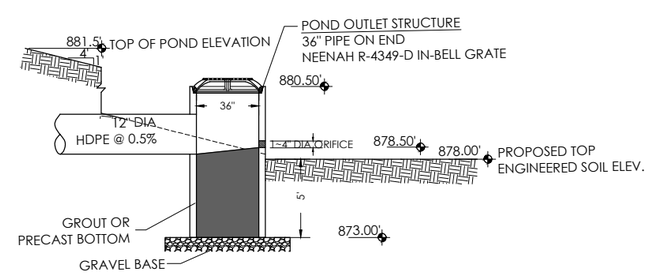

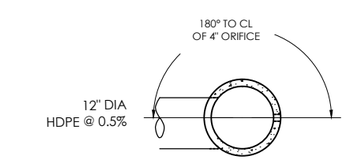

EAST BIORETENTION DEVICE

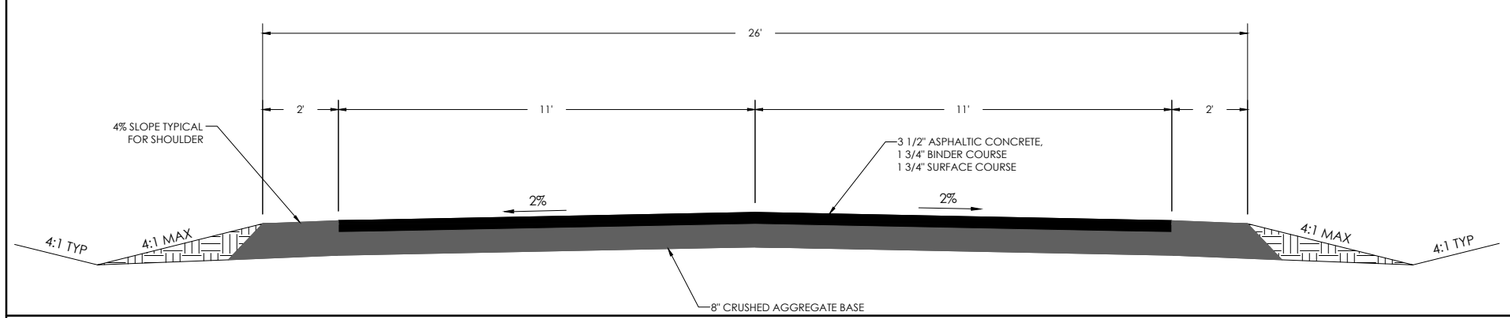

TYPICAL 26' RURAL STREET SECTION - 2% CROWN

GEC

General Engineering Company

P.O. Box 340 • 916 Silver Lake Dr. • Portage, WI 53901
608-742-2169 (Office) • 608-742-2592 (Fax)
www.generalengineering.net

This documes contains confidential or proprietary information of General Engineering Company. Neither this document nor the information contained therein may be reproduced, disclosed, or used either in whole or in part except as specifically authorized by General Engineering Company.

STORM SEWER & STREET IMPROVEMENT DETAILS

Shorewood Hills North -- Phase III
Street & Utility Construction

Town of Lake Mills
Jefferson County, WI

NO.	REVISIONS	BY	DATE
1	Addendum 1	KCW	7/5/16

AS NOTED
SCALE

DRAWN BY SRR
DATE JUNE 2016
GEC FILE NO. 0500-44D
SHEET NO.
C7.1

G:\Current Files E-K\Forest Landscaping and Construction, Inc. 0500-44D\CAD 0500-44D\2_CIVIL\Production Drawings\2_Const. Plan Sets\JUNE 2016\1-C7.1-ST&STR DT-0500-44D.dwg, 7/6/2016 11:27:13 AM, 1:1

PRELIMINARY NOT FOR CONSTRUCTION

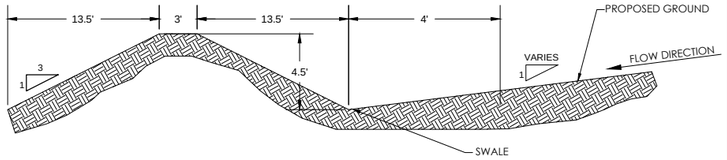

SOIL BERM

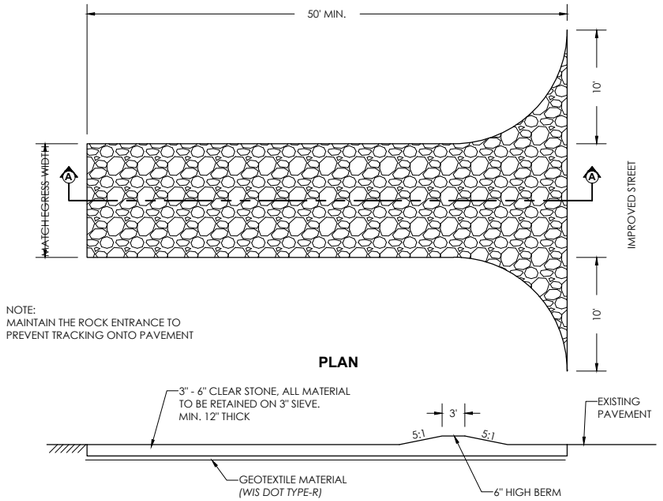

TRACKING PAD

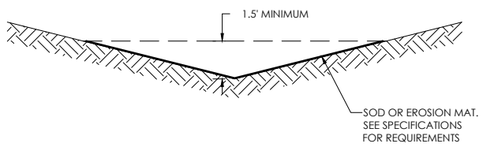

SECTION

DITCH EROSION CONTROL

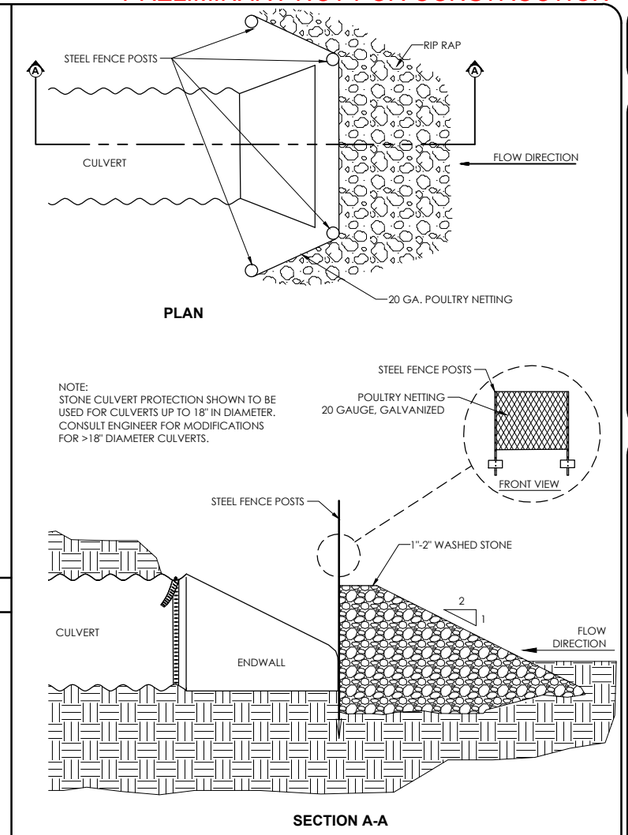

STONE CULVERT PROTECTION

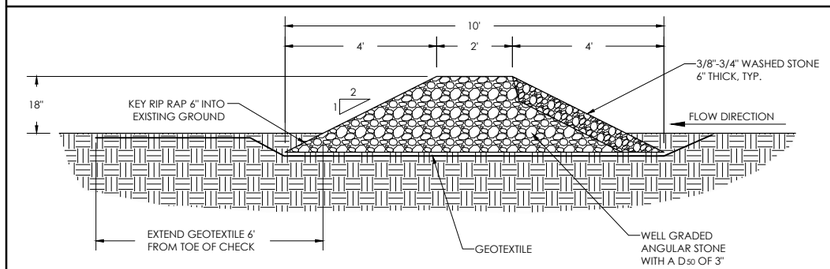

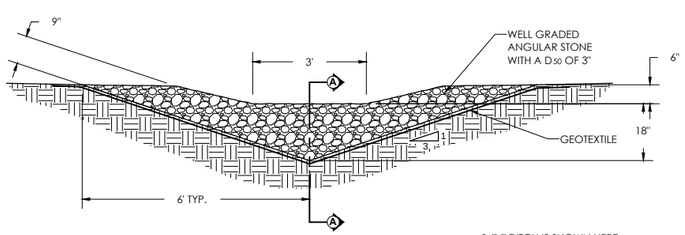

DITCH SECTION *

* "V" DITCH IS SHOWN HERE.
SEE CIVIL PLANS FOR DITCH SECTION.

STONE DITCH CHECK

NOTES:

1. HORIZONTAL BRACE WITH 2" X 4" WOODEN FRAME OR EQUIVALENT AT TOP OF POST AS DIRECTED BY THE ENGINEER.
2. TRENCH SHALL BE A MINIMUM OF 4" WIDE BY 6" DEEP TO BURY AND ANCHOR THE GEOTEXTILE FABRIC, FOLD MATERIAL TO FIT TRENCH AND BACKFILL AND COMPACT TRENCH AND COMPACT WITH EXCAVATED SOIL.
3. WOOD POST SHALL BE A MINIMUM SIZE OF 1 1/8" X 1 1/8" OF OAK OR HICKORY.

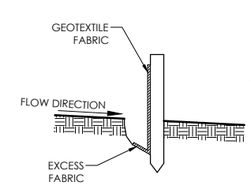

TRENCH DETAIL

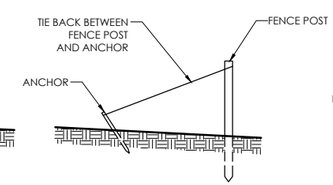

TIE BACK DETAIL

WHEN REQUIRED BY ENGINEER

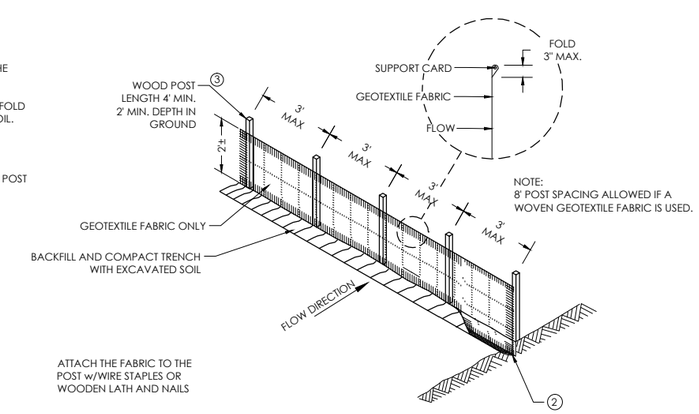

ATTACH THE FABRIC TO THE
POST w/WIRE STAPLES OR
WOODEN LATH AND NAILS

SILT FENCE

GEC

General Engineering Company

P.O. Box 340 • 916 Silver Lake Dr. • Portage, WI 53901
608-742-2169 (Office) • 608-742-2592 (Fax)
www.generalengineering.net

This documes contains confidential or proprietary information of General Engineering Company. Neither the contents nor the design of this document may be disclosed or used for any purpose either in whole or in part except as specifically authorized by General Engineering Company.

EROSION CONTROL DETAILS

Shorewood Hills North -- Phase III
Street & Utility Construction

Town of Lake Mills
Jefferson County, WI

NO.	REVISIONS	BY	DATE

AS NOTED
SCALE

DRAWN BY SRR
DATE June 2016
GEC FILE NO. 0500-44D
SHEET NO.
C7.2

G:\Current Files E-K\Forest Landscaping and Construction, Inc. 0500-44D\CAD 0500-44D\2_CIVIL\Production Drawings\2_Const. Plan Sets\JUNE 2016\1-C7.2-ECDT-0500-44D.dwg, 6/13/2016 10:07:51 AM,
1:1